16-523-101
May 26,1986

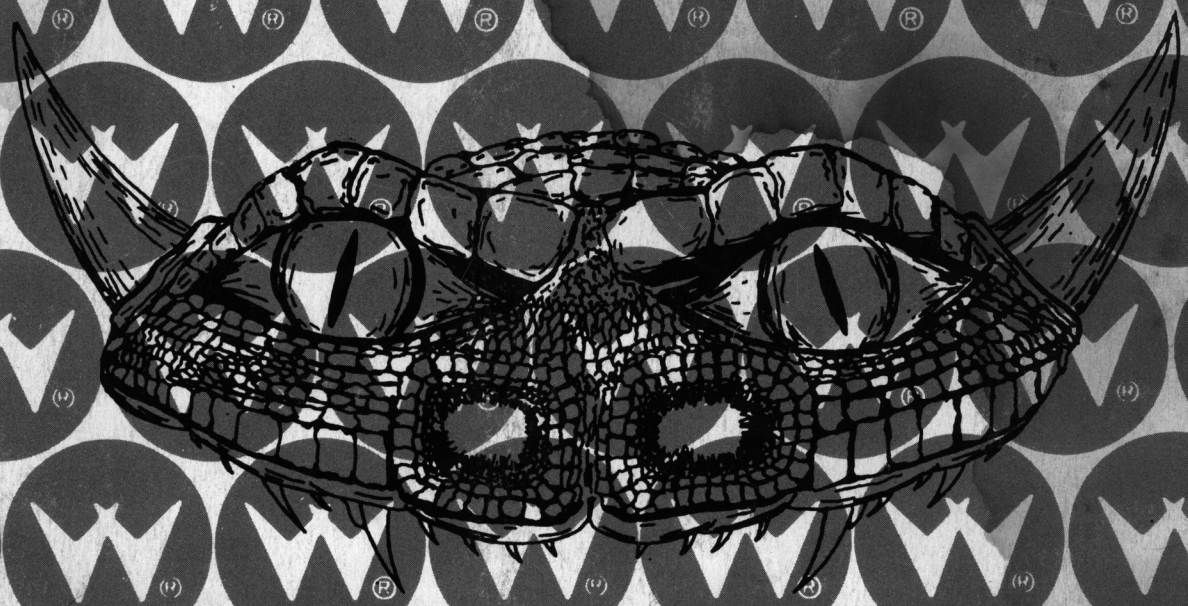

GRAND LIZARD™

INSTRUCTION MANUAL

Williams®
ELECTRONICS GAMES, INC.
3401 N. California Avenue
Chicago, Illinois 60618
(312) 267-2240
Telex 253095

GRAND LIZARD (System-11) ROM Summary

IC	DESCRIPTION	TYPE	IDENTIFIER	BOARD	PART NUMBER
Game ROM 1	32K x 8 ROM	27256	U27	CPU	A-5343-523-1
Game ROM 2	8K x 8 ROM	2764	U26	CPU	A-5343-523-5
Sound ROM 1	32K x 8 ROM	27256	U21	CPU	A-5343-523-2
Sound ROM 2	32K x 8 ROM	27256	U22	CPU	A-5343-523-3
Background (B/G) Sound ROM	32K x 8 ROM	27256	U4	B/G Sound	A-5343-523-4

NOTICE

To order a replacement ROM from your authorized WILLIAMS ELECTRONICS GAMES distributor, specify: (1) part number (if available); (2) ROM label color; (3) ROM level (number) on the label; (4) which game the ROM is used in.

Game	System 11 CPU Rev.	P/N - U15	P/N - U27	P/N - U26	P/N - U21	P/N - U22	P/N - U24	Jumpers
High Speed	A	5400-09250-00	A-5343-541-1	A-5343-541-5	A-5343-541-3	A-5343-541-2	5400-09250-00	W1, 2, 4, 5, and 7
↓	B	↓	↓	↓	↓	↓	↓	W1, 2, 4, 5, 7, 8, 11, 12, 13, 14, 16, 17, and 18
Alley Cats	A	↓	A-5343-1918-2	A-5343-1918-1	A-5343-1918-4	A-5343-1918-3	↓	W1, 3, 5, and 7
↓	B	↓	↓	↓	↓	↓	↓	W1, 3, 5, 7, 9, 11, 12, 13, 14, 16, 17, and 18
Grand Lizard	B	↓	A-5343-523-1	A-5343-523-5	A-5343-523-2	A-5343-523-3	↓	W1, 2, 4, 5, 7, 8, 11, 12, 13, 14, 16, 17, and 18

Sol. No.	Function	Solenoid Type	Wire [1] Color	Connections: CPU Bd.	Connections: Playfield/ Cabinet	Driver Trans.	Solenoid Part No.
01	Trough Kicker (Outhole)	Controlled	Gry-Brn	1P11-1	8P3-1	Q33	AE-23-800-01
02	3-Bank Raise	Controlled	Gry-Red	1P11-3	8P3-2	Q25	AE-23-800-04
03	4-Bank Raise 1 (left 2 targets)	Controlled	Gry-Orn	1P11-4	8P3-3	Q32	AE-23-800-04
04	4-Bank Raise 2 (right 2 ")	Controlled	Gry-Yel	1P11-5	8P3-4	Q24	AE-23-800-04
05	Lockup Eject (Multi-Ball)	Controlled	Gry-Grn	1P11-6	8P3-5	Q31	AE-23-800-03
06	Lockup Flasher	Controlled	Gry-Blu	1P11-7	8P3-6	Q23	#63 flashlamps
07	Left Magnet Flasher	Controlled	Gry-Vio	1P11-8	8P3-7	Q30	#63 flashlamps
08	Ball Feed	Controlled	Gry-Blk	1P11-9	8P3-8	Q22	AE-23-800-03
09	Left Magnet	Controlled	Brn-Blk	1P12-1	8P3-9	Q17	5580-09613-00
10	Right Magnet	Controlled	Brn-Red	1P12-2	8P3-10	Q9	5580-09613-00
11	General Illumination Relay	Controlled	Brn-Orn	1P12-4	3P7-1	Q16	5580-09555-00
12	3-Bank Flasher	Controlled	Brn-Yel	1P12-5	8P3-12	Q8	#63 flashlamps
13	Eyes (Backbox & Head)	Controlled	Brn-Grn	1P12-6	8P3-13, 9P1-13	Q15	#63 flashlamps
14	Credit Knocker (or Token	Controlled	Brn-Blu	1P12-7	Backbox	Q7	AE-23-800-02
15	Bell Dispenser)	Controlled	Brn-Vio	1P12-8	7P1-17	Q14	SM-29-1000-DC
16	Coin-Lockout Relay	Controlled	Brn-Gry	1P12-9	7P1-18,7P4-4	Q6	404603-2 [2]
17	Left Kicker	Special #1	Blu-Brn	1P19-7	8P3-17	Q75	AE-23-800-03
18	Right Kicker	Special #2	Blu-Red	1P19-4	8P3-18	Q71	AE-23-800-03
19	Right Magnet Flasher	Special #3	Blu-Orn	1P19-3	8P3-19	Q73	#63 flashlamps
20	Not Used	Special #4					
21	Not Used	Special #5					
22	Not Used	Special #6					
-	Upper Right Flipper	-	(Blk-Yel)		(7J1-31,8P3-33) [3]	-	FL24/600-30/2600-50VDC
-	Right Flipper	-	Orn-Vio (Blu-Vio)	1P19-1	7P1-7 (7J1-8,8P3-34) [3]	-	FL23/600-30/2600-50VDC
-	Upper Left Flipper	-	(Blk-Blu)		(7J1-30,8P3-31) [3]	-	FL24/600-30/2600-50VDC
-	Left Flipper	-	Orn-Gry (Blu-Gry)	1P19-2	7P1-9 (7J1-10,8P3-32) [3]	-	FL23/600-30/2600-50VDC

Notes:
1. Wire colors, except flipper Orn-Vio and Orn-Gry, are ground connections (to coil terminal with unbanded end of diode). Flipper Orn-Vio and Orn-Gry wires connect from CPU Board to flipper switch.
2. Solenoid 16 has a Coinco part number.
3. Connections shown in parentheses are from flipper switch to flipper coil.

16-523-101
May 26,1986

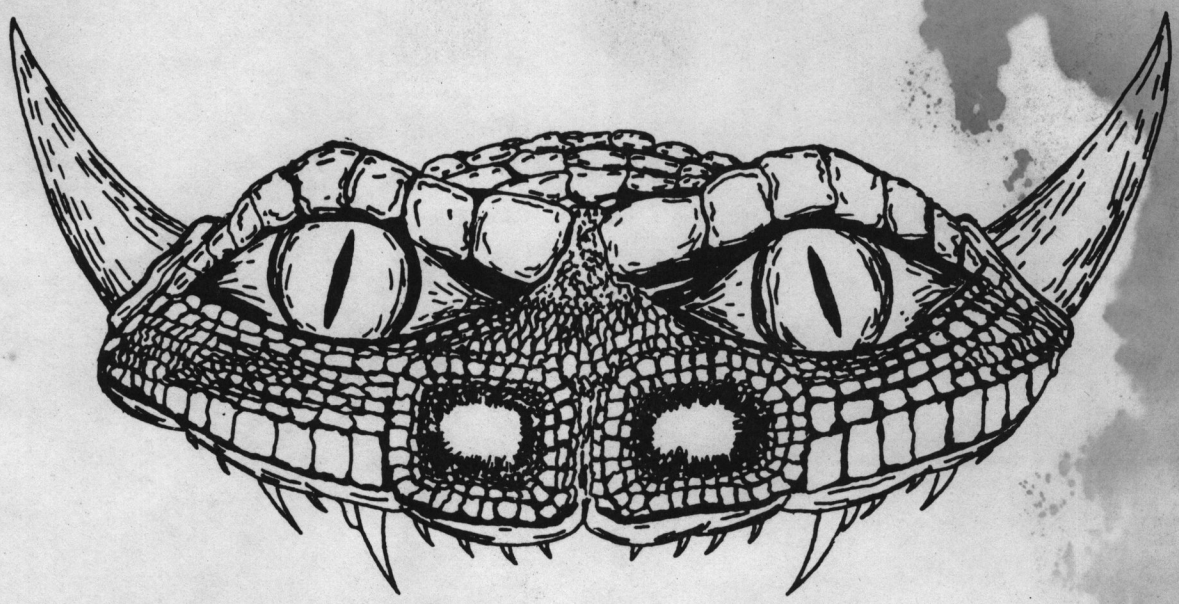

GRAND LIZARD™

INSTRUCTION MANUAL

Williams®
ELECTRONICS GAMES, INC.
3401 N. California Avenue
Chicago, Illinois 60618
(312) 267-2240
Telex 253095

NOTES

Contents

Section 1 - Game Operation & Test Information

GRAND LIZARD (System-11) ROM Summary . . . 1
Connector Identification . . . 2
GRAND LIZARD Circuit Boards. . . . 2
GRAND LIZARD Game Control Locations . . . 2
Pinball Game Assembly Instructions . . . 3
Figure 1. Pinball Assembly, Playfield Pitch Angle, and Leg Leveler Details . . . 3
Game Operation . . . 4
GRAND LIZARD Game Play . . . 5
GRAND LIZARD Game Status Displays . . . 6
GRAND LIZARD Audit Table . . . 7
GRAND LIZARD Game Adjustment Table . . . 8-9
Game Adjustment Procedure . . . 10
Items 01 - 02. . . . 10
03 - 08. . . . 11
09 - 18. . . . 12
19 - 28. . . . 13
29 - 38. . . . 14
39 - 48. . . . 15
49 - 52. . . . 16
53 - 57. . . . 17
58 - 62. . . . 18
63 - 68. . . . 19
69 - 70. . . . 20
Resetting the High Scores. . . . 21
Game Pricing . . . 21
Pricing Table . . . 22
Test/Diagnostic Procedures. . . . 23
Music Test. . . . 23
Display Test. . . . 23
Sound Test. . . . 23
Lamp Tests . . . 23
GRAND LIZARD Lamp-Matrix Table . . . 24
Special and Controlled Solenoids - Diagrams and Details . . . 24
Solenoid Test . . . 25
GRAND LIZARD Solenoid Table . . . 25
Switch Tests . . . 25
GRAND LIZARD Switch-Matrix Table . . . 26
Ending the Diagnostic Tests . . . 27
Auto Burn-in Mode . . . 27
System-11 Memory Chip Test. . . . 27
CPU LED Indicator Codes Table . . . 27
System-11 Sound Section Test . . . 28
Figure 2. Adjustments and Lubrication Points, Ball Feeder Trough. . . . 28

Section 2 - Game Parts Information

Display Panels & Segments Diagrams . . . 30
Alphanumeric Master Display Board (C-10877). . . . 31
System 11 CPU Board Parts Layout and Parts Listing . . . 32 - 33
Background Sound Board (C-11030). . . . 34
D-8345 Power Supply Board. . . . 35

Contents

Section 2 - Game Parts Information (Continued)

Backbox Parts 36
Lizard Head, Switch & Lamps Assembly, A & B Ramp 37
GRAND LIZARD Playfield Mylars & Miscellaneous Grand Lizard Parts 38
Flipper Assemblies (C-9952-R & C-9953-L) 39
Standup Targets & Magna-Save™ Magnet 39
4-Bank Drop Target Assembly (D-10883) 40
3-Bank Drop Target Assembly (D-9355) 41
Multi-Ball™ Ejector 42
Playfield Pivot Pin & Bracket 42
Playfield Parts 43
Switches 44
Lamps 45
Solenoids & Rubber Parts 46

Section 3 - Reference Diagrams & Schematics

Cabinet Wiring Diagram 47
Alphanumeric Master Display Board Schematic 48
Background Sound Board Schematic 49
Interboard Signals Diagrams 50
Schematic, System 11 CPU (16-8947, Sheet 1 of 4) 51
Schematic, System 11 CPU (16-8947, Sheet 2 of 4) 52
Schematic, System 11 CPU (16-8947, Sheet 3 of 4) 53
Schematic, System 11 CPU (16-8947, Sheet 4 of 4) 54
Power Wiring Diagram 55
D-8345 Power Supply Schematic 56
C-8364 Display Schematic 56

Section 1
Game Operation & Test Information

- *GRAND LIZARD* (System-11) ROM Summary
- Pinball Game Assembly Instructions
- Game Play
- Game Status Displays
- Game Adjustment Procedure
- Game Pricing
- Test/Diagnostic Procedures

GRAND LIZARD (System-11) ROM Summary

IC	DESCRIPTION	TYPE	IDENTIFIER	BOARD	PART NUMBER
Game ROM 1	32K x 8 ROM	27256	U27	CPU	A-5343-523-1
Game ROM 2	8K x 8 ROM	2764	U26	CPU	A-5343-523-5
Sound ROM 1	32K x 8 ROM	27256	U21	CPU	A-5343-523-2
Sound ROM 2	32K x 8 ROM	27256	U22	CPU	A-5343-523-3
Background (B/G) Sound ROM	32K x 8 ROM	27256	U4	B/G Sound	A-5343-523-4

NOTICE

To order a replacement ROM from your authorized WILLIAMS ELECTRONICS GAMES distributor, specify: (1) part number (if available); (2) ROM label color; (3) ROM level (number) on the label; (4) which game the ROM is used in.

CONNECTOR IDENTIFICATION

WILLIAMS ELECTRONICS GAMES uses a special technique to identify connectors. Each plug or jack receives a prefix number (which identifies the circuit board), a letter, and a number. J-designations refer to the male part of a connector. P-designations refer to the female part of a connector. For example, 1J1 designates jack 1 of board 1 (a CPU Board jack); 3P6 designates plug 6 of board 3 (a Power Supply Board plug).

Identifying the specific pin number of a connector involves a hyphen, which separates the pin number from the plug or jack designation. For example, 1J1-3 refers to pin 3 of jack 1 on board 1.

GRAND LIZARD CIRCUIT BOARDS

All *GRAND LIZARD* Circuit Boards are in the backbox. They are accessible by removing the backbox glass, unlatching the insert board, and swinging it open.

CPU BOARD. The System-11 CPU Board (p/n D-10880) must be equipped with the ROMs specified in the *GRAND LIZARD* (System-11) ROM Summary. For this ROM complement, on *Revision A* CPU boards (having only jumpers W1 through W7): jumpers W1, W2, W4, W5, and W7 must be connected; on *Revision B* CPU boards (having jumpers W1 through W18): jumpers W1, W2, W4, W5, W7, W8, W11, W12, W13, W14, W16, W17, and W18 must be connected. Jumper W7 is cut/removed for West German games.

BACKGROUND SOUND BOARD. The Background Sound Board is p/n C-11029.

DISPLAY BOARDS. The Alphanumeric Display Board is p/n D-10877. Two of the 7-digit Player Score Displays (SPEEDER 1, SPEEDER 2) are p/n C-10866. The SPEEDER 3 and 4 Displays are p/n C-8364. The 2-digit Credit, 2-digit MATCH (also Ball-in-Play) Display is p/n C-8365.

POWER SUPPLY BOARD. The Power Supply Board is p/n D-8345 (equipped with a relay).

Prefix numbers for *GRAND LIZARD* System-11 circuit boards and major assemblies are listed below:

1 -	CPU	6 -	Backbox	11 -	B/G Sound
2 -	(not assigned)	7 -	Cabinet	12 -	(not assigned)
3 -	Backbox Power Supply	8 -	Playfield	13 -	(not assigned)
4 -	Alphanumeric Display	9 -	Insert Board	14 -	(not assigned)
5 -	Player Score Displays	10 -	(not assigned)	15 -	Flipper Power Supply

GRAND LIZARD GAME CONTROL LOCATIONS

The On-Off switch is on the bottom of the cabinet near the right front leg.

The Volume Control is on the left inner wall of the cabinet on the tilt mechanisms board. It is accessible by opening the coin box door.

The Credit switch is a pushbutton to the left of the coin door on the cabinet exterior.

GAME ADJUSTMENT/DIAGNOSTIC SWITCHES. *GRAND LIZARD* allows the operator to program virtually all game adjustments, obtain bookkeeping information, and diagnose problems, using only three switches mounted on the inside of the coin door and the Credit buttom beside the coin door.

ADVANCE, AUTO-UP/MANUAL-DOWN, and HIGH-SCORE RESET are the switches located on the inside of the coin door. Refer to the Game Status Displays text and the Text/Diagnostic Procedures for details concerning their operation.

The Memory Protect switch is on the inside frame of the coin door. This interlock switch must be open to clear bookkeeping totals and to make game adjustments. It automatically opens, when the coin door opens.

The CPU Diagnostic switch (SW 2) is the left switch (of the two switches mounted on the lower edge of the CPU Board) near a large, socketed microprocessor chip. This switch initiates the Memory Chip Test explained in the Diagnostic Procedures.

The Sound Diagnostic switch (SW 1) is the right switch of the two mounted on the lower edge of the CPU Board. This switch initiates the Sound Section Test. Refer to the Diagnostic Procedures.

PINBALL GAME ASSEMBLY INSTRUCTIONS

1. Open the shipping container; remove all cartons, parts, and other items, and set them aside.
2. Place cabinet on a support and attach rear legs, using leg bolts (provided in the cash box).
3. Attach the front legs, using leg bolts.
4. Reach into the cabinet and backbox and check the mating of the interconnecting cables, matching several wire colors at each connector.

CAUTION

Ensure that the interconnecting cables are free to move (not kinked or pinched). Be careful not to damage wires at any stage of the assembly process.

5. Raise the hinged backbox into position. Secure the backbox with mounting bolts through the bottom holes into the threaded fasteners in the cabinet.
6. Extend the rear leg levelers to approximately 2/3 length below the leg bottom. Remove the cabinet from its support and place it on the floor.
7. Remove the playfield cover glass to permit accurate measurement of the playfield level and pitch. Level (side-to-side) the playfield (preferably measured ON the playfield surface), and firmly tighten the nut on each leg leveler shaft to maintain this level setting, as shown in Figure 1.
8. Adjust the front leg levelers for proper playfield level (side-to-side) *and* playfield pitch angle (incline) of approximately 6 degrees. (Again, it is recommended that these measurements be made ON the playfield, not the cabinet nor the playfield cover glass.) Tighten the nut on each leg leveler shaft to maintain this setting.

CAUTION

Playfield pitch angle adjustments can affect the operation of the ball-roll tilt and the plumb bob tilt, inside the cabinet. The operator should adjust these tilt mechanisms for proper operation, after completion of the desired playfield pitch angle setting.

9. Move the game into the desired location; recheck the level and pitch angle of the playfield.
10. Verify that three balls are installed in the game.
11. Clean and re-install the playfield cover glass. Prepare the game for player operation.

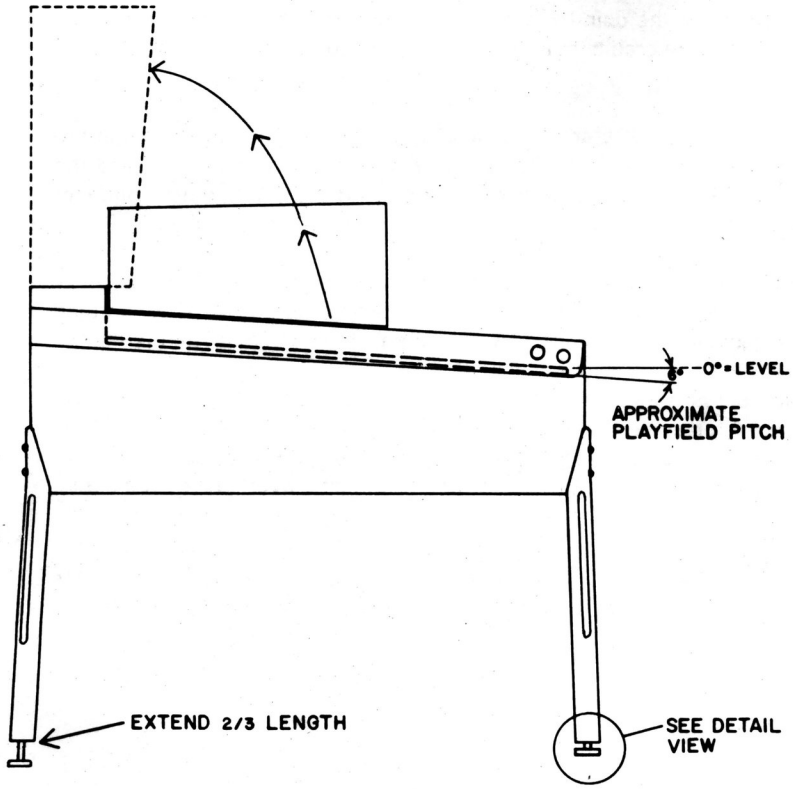

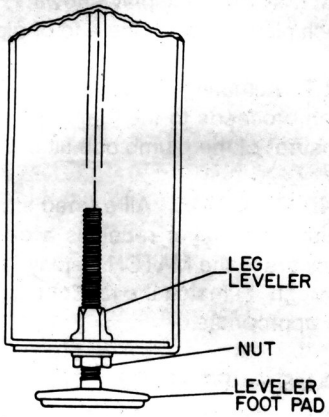

Detail View-Leg Leveler

Figure 1. Pinball Assembly, Playfield Pitch Angle, and Leg Leveler Details.

GAME OPERATION

WARNING

After assembly and installation at its site location, this game must be plugged into a properly grounded outlet to prevent shock hazard, and to assure proper game operation. DO NOT use a 'cheater' plug to defeat the ground pin on the line cord. DO NOT cut off the ground pin.

POWERING UP. With the coin door closed, plug the game in, and switch it ON, using the On-Off switch. In normal operation, the player 1 score display and the lower two 2-digit displays (Credits and BALL IN PLAY/MATCH) initially all show 00. The GAME OVER indicator blinks. Then, the game goes into the Attract Mode (Playfield and backbox lamps flashing, sounds being heard, etc.).

CAUTION

GRAND LIZARD's System 11 game program has a new capability to aid the operator and service personnel: At game Turn-On (and also when the operator is beginning the Test/Diagnostic Procedures), a display now signals when a switch has NOT been actuated during ball play for 60 balls (20 games). Up to three switches can be displayed during this Switch Problem reporting activity. Moreover, *GRAND LIZARD* compensates the game play requirements affected by each disabled switch to allow 'nearly normal' play. This helps keep *GRAND LIZARD* earning good profits! More information is available in the Diagnostic Procedures text describing the Switch Testing.

ATTRACT MODE*. Playfield and backbox lamps blink. All player score displays exhibit a series of messages informing the player concerning:

A. Recent highest scores*;
B. A "custom message" ("BEWARE THE - ... LEGEND OF THE - ... GRAND LIZARD")*;
C. The score to achieve to obtain a Replay award*;

These displays (or variations of them) reappear occasionally, accompanied by sounds and music, until a player initiates game play by inserting a coin or, when credits are available, pressing the Credit button.

CREDIT POSTING. Insert coin(s). A sound is heard for each coin, and the Credits display shows the number of credits purchased. Even if the number of maximum allowable credits* is exceeded by coin purchase or high score, credits are posted correctly. However, the coin-lockout coil then de-energizes, until the number of remainig credits is less than the maximum. No more credits may be purchased (and coins are rejected), while the coin-lockout coil is de-energized.

STARTING A GAME. Press the Credit button once. A startup sound plays, and the amount shown in the Credit display decreases by one. Player display 1 flashes (until the first playfield switch is actuated), and the BALL IN PLAY display shows 1. Additional players may enter the game by pressing the Credit button once for each player, before the end of play on the first ball.

TILT. Actuating the Slam Tilt switch on the coin door inside the cabinet ends the current game; *GRAND LIZARD* then proceeds to the Game Over Mode. With the actuation of the ball-roll or playfield tilt switches, or the third closure* of the plumb bob tilt switch, the player loses the remaining play of that ball, but can complete the game.

END OF GAME. All earned scores and bonuses are awarded. If a player's final score exceeds the specified value, the player receives a designated award for achieving the current highest score. A random digit set* appears in the MATCH display. Credit* may be awarded, when the last two digits of any player's score display (1 through 4) match the random digits of the MATCH display. Match, high score, and game over sounds are made, as appropriate.

GAME OVER MODE. The GAME OVER indicator lights. The player 1 and 2 score displays show GAME OVER. Then, the high scores flash on the appropriate player score displays. The game proceeds to the Attract Mode.

* - operator-adjustable feature

GRAND LIZARD GAME PLAY

L-I-Z-A-R-D: Awards bonus multiplier. Completing L-I-Z awards one magnet unit to the left Magna-save™. Completing A-R-D awards one magnet unit to the right Magna-save™. First completion of L-I-Z-A-R-D lights the spinner for 2000 points per spin.

3-BANK COMPLETION:
1st, 2nd, & 3rd time - Advances 'cave' value.
4th time - Lights Extra Ball.
5th time - Awards Extra Ball and lights Special.
6th time - Awards Special.

FLASH BANK: Hitting any target stops the score sweep and starts timeout. If flash bank is completed before timeout, the player earns the flashing score.

CAVE: Shooting ball through the cave collects 3000, 10,000, 20,000 or 40,000 points. A shot through the cave also advances the flash bank score (if it is timing). A cave shot also activates "SPEED50".

SPEED50: Whenever a ball goes through the cave, a lamp by the upper right standup target begins blinking for a short period of time. If this target is hit while the lamp is blinking, the player earns 50,000 points. To obtain this score requires the player to be fast.

MYSTERY: The player earns the Mystery Score by first going through a flipper lane, then up either the A or B ramp by which the Mystery lamp is blinking. Score value is between 30,000 and 99,000 points.

MULTI-BALL™: Multi-ball™ play begins by either locking all three balls under the A ramp, or by locking one or two balls under the A ramp and then hitting the Release (target) at the top of the playfield. Scoring is 2X for 2-ball Multi-ball or 3X for 3-ball Multi-ball.

A / B RAMP: When a player shoots a ball up either the A or B ramp *and* through the Lizard head, that ramp is spotted for the player. Completing both ramps earns the following:
1st time - Lights Bonus Holdover arrow.
2nd time - Lights Outlane for 50,000 points and chance for full bonus.
3rd time - Lights lower Extra Ball lamp.
4th time - Lights lower Special lamp.
5th (and more) time - Scores 50,000 points.

BONUS HOLDOVER: Earned by shooting a ball up right chute to top of playfield, when the Bonus Holdover lamp is lit. If a player collects the Bonus Holdover during the last ball, the player collects the bonus points with any accumulated multipliers after the normal bonus countdown.

Note: Sweeping either the 3-bank or the flash bank awards the player with two times the score of that bank. (Sweeping the flash bank with a score of 100,000 during 3-bank Multi-ball awards 100,000 x 2 x 3 = 600,000).

GRAND LIZARD GAME STATUS DISPLAYS

GRAND LIZARD utilizes a new format for the display of information concerning the game's bookkeeping and game play feature adjustment. Basically, three classes of information now become available to the game owner/operator: Id (Identification); Au (Audit); Ad (Adjustment). Each of the underscored two-letter abbreviations for these classes appears in the Credits display, while the system microprocessor for the *GRAND LIZARD* game is displaying the items within each class in the status display mode.

Identification Information--Id

With the game turned on, the coin door open, and the AUTO-UP switch in the Up position, the operator can press the ADVANCE switch once, briefly. GRAND LIZARD's displays immediately change from the Attract Mode to the Game Status Display Mode. This is evident by the following display, shown in columnar form. The column headings refer to the various backbox displays. (Player display 3 does not appear in the listing because it remains blank):

Player 1	Player 2	Player 4	Credits	BALL IN PLAY/ MATCH
GRAND	**LIZARD**	**523 L-***	**Id**	**00**

* - 1 indicates initial ROM revision level; 2, 3, etc. for later revisions.

The game is named in the player score 1 and 2 displays. The game's identification number and the ROM revision level appears in the player 4 display. The Credits display shows the status display mode in abbreviated form, *Id.* The BALL IN PLAY/MATCH display shows the status display mode item for this particular display.

Audit Information--Au

While the AUTO-UP switch remains in the Up position, the operator can press the ADVANCE switch once, briefly, to begin the backbox displays of Audit (sometimes called "bookkeeping") Information. Forty-four audit entries are now available. Calculation of the various factors is no longer necessary because the *GRAND LIZARD* System 11's game program now performs all the mathematical factor computations. This information is intended to aid the owner/operator in evaluating how the game is performing in each location, by providing knowledge about which game features are receiving the most play. With this information, the owner/operator can determine whether adjusting the game features to other settings will contribute to increased game earnings.

The operator can press the ADVANCE button once to view each Audit Information display item. To proceed more rapidly through this information, the operator only has to press and hold the ADVANCE button. If a desired item is passed, the operator can use the MANUAL-DOWN switch position with the ADVANCE button to back up to the desired item.

The ***GRAND LIZARD Audit Table*** lists the 44 items of the Audit Information portion of the *GRAND LIZARD* Game Status Displays. Presentation of the displays is similar to that for the Identification Information; however, the player 1 and 2 displays are combined as a descriptive phrase. In light type below the column headings appear the respective backbox displays where the information appears. Because the player 4 display contains information which depends on game play, only a few example entries are shown in the table. The Credits display shows *Au* for all 44 audit items, so its entry is omitted from the tabular listing. Detection of erroneous data affecting any of the counters used in these audit items causes the message, ERROR, to be displayed in the player 3 display, during display of any audit item associated with that particular counter. (The program does not analyze the cause of the error; it merely alerts the operator of the error's existence by the message.)

GRAND LIZARD Audit Table

Audit Item (MATCH)	Descriptive Phrases (Player 1 and 2 Displays)	Audit Factor [1] Value (Player 4)
01	Left Coins [chute next to coin door hinge]	432
02	Center Coins	0
03	Right Coins	398
04	Paid Credits	830
05	Total Plays	
06	Total Free (Total Free Plays)	
07	Percent Free (% Free Plays)	
08	Replay Awards	
09	Percent Replay (% Replay Awards)	
10	Special Awards	
11	Percent Special (% Special Awards)	
12	Match Awards	
13	HSTD (High Score to Date) Credits	
14	Percent HSTD (% HSTD Credits)	
15	Extra Balls	
16	Percent Ex. Ball (% Extra Balls)	
17	Av. Ball Time (Average Time in Seconds)	
18	Min. of Play (Minutes of Play)	
19	Balls Played	
20	Replay 1 Awards	
21	Replay 2 Awards	
22	Replay 3 Awards	
23	Replay 4 Awards	
24	1 Playr Games	
25	2 Playr Games	
26	3 Playr Games	
27	4 Playr Games	
28	Burn in Cycles	
29	3 Bank X Balls (# of Extra Balls at 3-Bank)	
30	Maximum Bonuses (# of Bonuses Awarded from Outlane)	
31	100K Scores (# of 4-Bank 100K Scores)	
32	Awarded Speed50 (# of Scored Speed 50)	
33	2X Mult Ball (# of 2X Multi-Ball Plays)	
34	3X Mult Ball (# of 3X Multi-Ball Plays)	
35	Bonus Holdovr (# of Bonus Holdovers Collected)	
36	Audit 8 (Not Used)	
37	Audit 9 (Not Used)	
38	Audit 10 (Not Used)	
39	H. S. Reset Counter	
40	Aut. Pct. Data 1	
41	Aut. Pct. Data 2	
42	Aut. Pct. Data 3	
43	Aut. Pct. Data 4	
44	Aut. Pct. Data 5	

NOTE:

1. The numbers shown in this column for Items 1 through 4 are examples. Entries for all items depend on the amount of play; thus, they will vary from location to location.

Adjustment Information--Ad

At end of the Audit Information presentation, with the AUTO-UP switch in the Up position, the operator can press the ADVANCE button to proceed to the Adjustment Information portion of the *GRAND LIZARD* Game Status Displays.

The operator can press the ADVANCE button once to view each Adjustment Information display item. To proceed more rapidly through this information, the operator only has to press and hold the ADVANCE button. If a desired item is passed, the operator can use the MANUAL-DOWN switch position with the ADVANCE button to back up to the desired item.

GRAND LIZARD GAME STATUS DISPLAYS (Continued)

The ***GRAND LIZARD Game Adjustment Table*** lists the 70 items of the Adjustment Information portion of the *GRAND LIZARD* Game Status Displays. Presentation of the displays is similar to that for the Audit Information (that is, the player 1 and 2 displays combine as a descriptive phrase; the light type below the column headings names the respective backbox displays where the information appears, etc.). The Credits display shows *Ad* for all 70 adjustment items, so its entry is omitted from the tabular listing.

GRAND LIZARD Game Adjustment Table

Adjustment Item (MATCH)	Descriptive Phrases (Player 1 and 2 Displays)	Factory Setting (Player 4)
01	AUTO REPLAY (%) (or FIXED REPLAY SCORES) [1]	10 (%)
02	REPLAY START (or REPLAY LEVEL 1) [1]	1,400,000
03	REPLAY LEVELS (or REPLAY LEVEL 2) [1]	01
04	(REPLAY LEVEL 3) [1]	OFF
05	(REPLAY LEVEL 4) [1]	OFF
06	REPLAY AWARD	Credit
07	SPECIAL AWARD	Credit
08	MATCH FEATURE	On
09	BALLS / GAME	03
10	TILT WARNING	03
11	MAXIMUM EX. BALL	04
12	MAXIMUM CREDITS	10
13	HIGHEST SCORES	On
14	BACKUP HI. SCR1	3,000,000
15	BACKUP HI. SCR 2	2,800,000
16	BACKUP HI. SCR 3	2,600,000
17	BACKUP HI. SCR 4	2,400,000
18	HI. SCR1 CREDITS	03
19	HI. SCR2 CREDITS	01
20	HI. SCR3 CREDITS	01
21	HI. SCR4 CREDITS	01
22	H. S. RESET EVERY (6,000 PLAYS) [2]	
23	FREE PLAY	NO
24	U.S.A. 1 COINAGE (1 COIN 1 PLAY) [2,3]	
25	LEFT UNITS	01
26	CENTER UNITS	04
27	RIGHT UNITS	01
28	UNITS/ CREDIT	01
29	UNITS/ BONUS	00
30	MINIMUM UNITS	00
31	4 BANK CYCLE [0 - 9; 0 = fast ... 9 = slow]	04
32	4 BANK TIMEOUT [0 - 9; 0 = fast ... 9 = slow]	05
33	3 BANK TIMEOUT [0 - 9; 0 = fast ... 9 = slow]	05
34	MYSTERY TIME [Lamp 'on' time; 0 = 1 sec ... 9 = 10 sec]	05
35	MAGNET TIME [1 lamp = 1 unit; 0 - 9; 0 = 1 sec ... 9 = 3 sec]	05
36	SPEED50 TIME [0 - 9; 0 = 1/2 sec ... 9 = 3 sec]	03
37	MEMORY B. MULTS [no = not retained; yes = retained]	NO
38	MEMORY 3 BANK [no = cave & special not retained; yes = retained]	NO
39	RAMPS SPOT A. B (no = easy = A/B lamp via *EITHER* A or B shot; yes = hard = *ONLY* A and B shot spots A/B lamp]	NO
40	ATMODE SOUND [no = no sound; yes = attract mode sound]	YES

GRAND LIZARD Game Adjustment Table (Continued)

Adjustment Item (MATCH)	Descriptive Phrases (Player 1 and 2 Displays)	Factory Setting (Player 4)
41	X. BALL MEMORY [no = extra ball lamps not retained; yes = retained]	YES
42	A / B MEMORY [no = A/B awards not retained; yes = A/B awards retained]	YES
43	L. I. Z. A. R. D SPOT A . B. [no = no A/B ramp spot for spelling LIZARD; yes = spot A or B]	YES
44	3 BANK AWARDS [easy = no timing; hard = X-ball & Special timed; harder = all attempts timed]	hard
45	UNUSED ADJUST	
46	UNUSED ADJUST	
47	UNUSED ADJUST	
48	UNUSED ADJUST	
49	CUSTOM MESSAGE [4]	ON
50	SW. ALARM BELL	YES
51	ENGLISH TEXT	
52	UNUSED ADJUST	
53 [5]	INSTALL GERMAN 1 [6]	
54 [5]	INSTALL GERMAN 2 [6]	
55 [5]	INSTALL GERMAN 3 [6]	
56 [5]	INSTALL GERMAN 4 [6]	
57 [5]	INSTALL GERMAN 5 [6]	
58 [5]	INSTALL GERMAN 6 [6]	
59 [5]	INSTALL ADDABALL	NO
60 [5]	INSTALL 5-BALL	NO
61 [5]	INSTALL NOVELTY	NO
62 [5]	INSTALL EX. EASY	NO
63 [5]	INSTALL EASY	NO
64 [5]	INSTALL MEDIUM	NO
65 [5]	INSTALL HARD	NO
66 [5]	INSTALL EX. HARD	NO
67	AUTO BURN-IN	NO
68	CLEAR COINS	NO
69	CLEAR AUDITS	NO
70	INSTALL FACTORY	NO

NOTES:

1. Automatic Replay percentage value range is adjustable from 5 to 50%, via the Credit button. Item 02 permits changing the factory setting value for Replay Start Level (valid for next 500 games played). Item 03 permits setting up to four replay levels, with values as detailed in text describing item 03.

   For Fixed Replay Scores, set Auto Replay value to 1 less than 5(%) via the Credit button. Go to items 02, 03, 04, and 05 to install their replay level scores. Turn off any replay score level by setting 00 as its value.
2. Phrase in parentheses is Factory Setting. Phrase appears in (player) 3 and 4 displays. Press Credit button to change setting of item 22, or the game pricing of item 24.
3. To change country OR coinage setting, press Credit button to obtain 16 Standard settings, followed by a Custom Setting. The Custom Setting activates items 25 through 30. When a Standard Setting is used, items 25 through 30 are set automatically, and cannot be changed.
4. To install Custom Message, press flipper button for alphabet and special characters. Press Credit button for next message letter or character.
5. Special Preset Adjustment, whose effects are noted in the Game Adjustment text.
6. Refer to **Pricing Table** and text describing these items.

GAME ADJUSTMENT PROCEDURE

Adjustment Items 01 through 70

The coin door must be open to access the Game Adjustment/Diagnostic switches. All readings and adjustments require operation of these coin door switches. Some adjustments utilize the Credit button; some also use the flipper button(s). Additional text describing the game adjustment items follows this procedure.

1. Use AUTO-UP and press ADVANCE. The BALL IN PLAY/MATCH display initially indicates **Ad 01.** The player 1 and 2 score displays indicate AUTO REPLAY. The player 3 display shows PERCENT. If the factory setting has not been changed, the player 4 display shows 10, indicating the setting of a 10% replay percentage.

2. To reach a higher item number (in the BALL IN PLAY/MATCH display), use AUTO-UP and press ADVANCE. To return to a previous item number, use MANUAL-DOWN and press ADVANCE.

3. With the desired item number (refer to the ***GRAND LIZARD* Game Adjustment Table**) showing in the BALL IN PLAY/MATCH display, increase the value shown in the player 4 display by using AUTO-UP and pressing the Credit button. Repeat this step for each item, until all adjustments have been made.

   For example, the operator may desire to zero the values associated with certain items listed in the ***GRAND LIZARD* Audit Table**. To zero the first four items (concerning the coin chutes and the total coins), the operator can proceed to item 68, Clear Coins, and press the Credit button to obtain the YES option. The operator then presses the ADVANCE button and notes the "COINS CLEARED" display, which verifies that the entry values for items 01 through 04 of the Audit Items are now reset to zero.

4. To proceed through the entire adjustments series, press *and hold* ADVANCE, until **Ad 70** shows in the BALL IN PLAY/MATCH display. From item 70, you can: (A) return to the Game-Over Mode; (B) restore factory settings and zero audit (bookkeeping) totals. Perform either of the following, as desired:

   A. To reach Game-Over Mode, use AUTO-UP and press ADVANCE once. *GRAND LIZARD* now goes to the Game-Over Mode.

   B. To restore factory settings, zero all audit (bookkeeping) totals, *and* return to Game-Over Mode, use AUTO-UP or MANUAL-DOWN to display item 70 in the BALL IN PLAY/MATCH display. Press the Credit button to display the YES option in the player 4 display. Using AUTO-UP, press ADVANCE once. *GRAND LIZARD* now zeroes ALL audit totals and changes ALL game adjustments back to those originally selected as Factory Settings. It then shows the operator a message ("FACTORY SETTING") that this has occurred. (A problem in the Memory Protection circuit or closing the coin door will cause the message "ADJUST FAILURE" to appear.) Press ADVANCE once more to return to the Game-Over Mode.

Details of Adjustment Items 01 through 70

01 Auto Replay (or Fixed Replay)

Of the two options, AUTO REPLAY is the Factory Setting. The percentage of replays automatically awarded has a Factory Setting of 10 % (German games have a Factory Setting of 15%). Use the Credit button to change the percentage within the range of 5 to 50 (%), with the value increasing using AUTO-UP (or decreasing using MANUAL-DOWN). The next Credit button change beyond 50%, or below 5%, selects the FIXED REPLAY option.

For AUTO REPLAY, Ad 02 provides the Starting Replay Level (player 1 and 2 displays show REPLAY START). Ad 03 provides the number of replay levels (01, 02, 03, or 04). *GRAND LIZARD* then proceeds to Ad 06 automatically.

For FIXED REPLAY, Ad 02 is the first replay level (REPLAY LEVEL 1). Ad 03, 04, and 05 are the other replay levels.

02 Starting Replay Level (or Replay Level 1)

For AUTO REPLAY (refer to Ad 01), the Factory Setting is 1,400,000 (German games have a Factory Setting of 1,000,000). The range of settings is 800,000 through 2,000,000 (by increments of 100,000 with AUTO-UP or decrements of 100,000 with MANUAL- DOWN).

02 Starting Replay Level (or Replay Level 1) (Continued)
For FIXED REPLAY, the operator can enter the value to be used for the first fixed replay score level via the Credit button. The range of settings is: OFF; 100,000 through 9,900,000 (by increments of 100,000 with AUTO-UP, or decrements of 100,000 with MANUAL-DOWN).

03 Replay Levels (or Replay Level 2)
For AUTO REPLAY (refer to Ad 01), the Factory Setting is 01 (one replay level). The option range is one, two, three, or four replay level(s). When the operator chooses two replay levels, *GRAND LIZARD* automatically adjusts the second replay level to be twice the value selected for Ad 02, the starting replay level. Choosing three or four replay levels automatically adjusts their replay levels to three times or four times the Ad 02 value.

For FIXED REPLAY, the technique of value entry and the range of settings are identical to those of Ad 02.

04 (Replay Level 3)
For AUTO REPLAY, this Adjustment Item is not applicable. *GRAND LIZARD* automatically bypasses this adjustment.

For FIXED REPLAY, the technique of value entry and the range of settings are identical to those of Ad 02.

05 (Replay Level 4)
For AUTO REPLAY, this Adjustment Item is not applicable. *GRAND LIZARD* automatically bypasses this adjustment.

For FIXED REPLAY, the technique of value entry and the range of settings are identical to those of Ad 02.

06 Replay Award
For either AUTO REPLAY or FIXED REPLAY (Ad 01), the operator can select the form of the award automatically provided when the player exceeds any Replay Level (Automatic or Fixed). The choices are:

Credit - Reaching each replay level obtains a credit (free game). This is the Factory Setting.
Ball - Reaching each replay level obtains an extra ball.
Audit - Reaching each replay level obtains nothing to the player; it does increase the entry value of the Audit Item(s) maintaining a tally of these awards (Au 08, and Au 20 through 23, as applicable).
Coil - Reaching each replay level causes the Knocker coil to activate once per free play won (instead of awarding a credit for each level exceeded).

NOTE
A ticket dispenser or token dispenser can be activated by the Knocker coil driver to provide an alternative award for each free play achieved by the player.

07 Special Award
The operator can select the form of the award automatically provided when the player scores a Special. The choices are:

Credit - Scoring each Special, when lit, obtains a credit (free game). This is the Factory Setting. A variation to this award occurs, when the setting of Ad 06 is Coil. (This permits a ticket or token dispenser to provide the award, when applicable.)
Ball - Scoring each Special, when lit, obtains an extra ball.
Score - Scoring each Special, when lit, obtains a score advance of 100,000 points to the player.

08 Match Award
The operator can select whether the Match action occurs at completion of each game. The choices are:

On - This is the Factory Setting. The game selects a random two-digit number at end of game and compares each player's score for an identical two digits in the rightmost two positions. A matching of the two digits results in the award of a credit (or a ticket/token, if a dispenser is attached, and the setting of Ad 06 is Coil).
Off - The MATCH display does not operate at completion of the game; no award is given.

09 Balls / Game

The operator can define a "game" by specifying the number of balls to be played. The Factory Setting is 3. The range of settings is 1 through 9.

10 Tilt Warning

The operator can specify the allowable number of total actuations of the plumb bob and playfield tilt mechanisms that can occur before the game is "tilted". The range of this setting is 1 through 5. The Factory Setting is 3.

11 Maximum Extra Ball

The operator can specify the maximum number of Extra Balls to be accumulated at any time. The range of this setting is 00 (which allows NO extra ball play, and displays a message, NO EX. BALL) and 1 through 9. The Factory Setting is 4.

12 Maximum Credits

The operator can specify the maximum number of credits the game can accumulate, either through game play awards or coin purchases. The range of settings is 5 through 99. The Factory Setting is 10. Reaching the specified setting actuates the coin-lockout relay, preventing the purchase of additional credits by causing the coins to be rejected.

NOTE

Whenever the number of credits is less than the specified maximum credits, any credits obtained by coin purchase or game awards (High Score, Match, Replay Levels, etc.) will be accumulated even though they exceed the maximum value. Thereafter, no additional credits can be accumulated, until the credit total is reduced below the specified maximum setting.

13 Highest Scores

The operator can allow the game to maintain a record of the four highest scores achieved to date. The Factory Setting is On. The optional alternative is Off, which deactivates this adjustment item.

14 Backup High Score 1

The operator can set the Backup High Score value in the player 1 score display, using the Credit button. The Factory Setting is 3,000,000. The game automatically restores the value set, when the operator presses, and holds, the HIGH SCORE RESET switch, or when an automatic High Score Reset event (Ad 22) occurs.

15 Backup High Score 2

This adjustment is similar to Ad 14, except that this applies to the player 2 score display. The adjustment technique is identical to Ad 14. The Factory Setting is 2,800,000. It is also restored as described for Ad 14.

16 Backup High Score 3

This adjustment is similar to Ad 14, except that this applies to the player 3 score display. The adjustment technique is identical to Ad 14. The Factory Setting is 2,600,000. It is also restored as described for Ad 14.

17 Backup High Score 4

This adjustment is similar to Ad 14, except that this applies to the player 4 score display. The adjustment technique is identical to Ad 14. The Factory Setting is 2,400,000. It is also restored as described for Ad 14.

18 Credits for Highest Score 1

The operator can select the number of credits to be awarded, by using the Credit button, whenever a player exceeds the previous Highest Score. The range of this setting is 00 through 10. The Factory Setting is 03. A variation to this award occurs, when the setting of Ad 06 is Coil. (This permits a ticket or token dispenser to provide the award, when applicable.)

19 Credits for Highest Score 2

This adjustment is similar to Ad 18, except that this applies to the player's exceeding the second highest score. The Credit button adjustment technique is the same as for Ad 18. The range of this setting is 00 through 03. The Factory Setting is 01.

20 Credits for Highest Score 3

This adjustment is similar to Ad 18, except that this applies to the player's exceeding the third highest score. The Credit button adjustment technique is the same as for Ad 18. The range of this setting is 00 through 03. The Factory Setting is 01.

21 Credits for Highest Score 4

This adjustment is similar to Ad 18, except that this applies to the player's exceeding the fourth highest score. The Credit button adjustment technique is the same as for Ad 18. The range of this setting is 00 through 03. The Factory Setting is 01.

22 Automatic High Score Reset

The operator can specify (via Credit button) that the game will provide an automatic reset of the displayed "Highest Scores", and the number of games to be played before the reset occurs. The values provided upon reset are those selected by the operator in Ad 14 through 17, the Backup High Scores. The range of this setting is Off (to disable this adjustment), and 1,000 to 99,000 games (in increments of 1,000). The Factory Setting is 6,000. (Audit item 39 displays the number of games remaining before the reset.)

23 Free Play

The operator can select (via the Credit button) whether a player can operate the game without a coin (free play) or with a coin. The optional alternatives are No (a coin is necessary) or Yes (game play is free; no coin is required). The Factory Setting is No.

24 Coinage Selections

The operator can specify (via the Credit button) any of the 16 Standard Settings for game pricing, each of which exhibits a message identifying the country and the number of coins required and the number of games that the coin requirement purchases. Choosing a Standard Setting permits the game to omit items Ad 25 through 30,which are adjustments allowing for a special custom coinage setting. The Factory Setting is U.S.A. 1 : 1 COIN 1 PLAY, as shown by the backbox display.

Following the last Standard Setting is a Custom Coinage Setting, which allows the operator to utilize Ad 25 through 30 in establishing a special coinage setting. A message, CUSTOM COINAGE, indicates that the operator can enter the appropriate values into the Ad 25 through 30 adjustment items.

The values for Ad 25 through 30 of each Standard Setting, as well as other possible values for the Custom Coinage Setting are shown in the **Pricing Table.**

25 Left Chute Coin Units

The operator can specify (via the Credit button) the number of coin units purchased by a coin passing through the left coin chute.

26 Center Chute Coin Units

The operator can specify (via the Credit button) the number of coin units purchased by a coin passing through the center coin chute.

27 Right Chute Coin Units

The operator can specify (via the Credit button) the number of coin units purchased by a coin passing through the right coin chute.

28 Units Required for Credit

The operator can define (via the Credit button) the number of coin units required to obtain 1 Credit. A coin unit counter in the game program totals the number of coin units purchased through all coin chutes prior to each game. If the total number of coin units purchased exceeds the 1 Credit factor by a multiple (or more, coin units) of the specified Units per Credit value, the Credits display shows the proper number of Credits. The coin unit counter retains any remaining coin units, until the start of a game; then, the coin unit counter is cleared (its contents are zeroed). The Factory Setting is 01.

29 Units Required for Bonus
The operator can specify (via the Credit button) that 1 additional Credit is to be indicated in the Credits display, when a particular number of coin units are accumulated. The Factory Setting is 00.

30 Minimum Units Required for any Credits Posted
The operator can specify that NO Credits are to be posted (indicated in the Credits display), until the credit units counter reaches a particular value. The Factory Setting is 00.

31 4 Bank Cycle (Flash Bank)
The operator can choose (via the Credit button) the rate at which the score value changes (between the playfield lamps). The range of this setting is 00 through 09; 00 is the fastest change rate, while 09 is the slowest rate. The Factory Setting is 04.

32 4 Bank Timeout
The operator can choose (via the Credit button) the timeout period for completion of the four flash bank drop targets. Completion of all four targets within this timeout period scores the value shown on the playfield lamp. The range of this setting is 00 through 09; 00 is the minimum time, while 09 is the maximum time. The Factory Setting is 05.

33 3 Bank Timeout
The operator can choose (via the Credit button) the timeout period for completion of the upper left bank of three drop targets. The first three completions of all three targets within this timeout period increases the value of the Cave from 3000 to 10,000, then 20,000, and finally 40,000. The fourth completion lights the EXTRA BALL lamp. The fifth completion awards the Extra Ball and lights the SPECIAL lamp. The sixth completion obtains the Special award. The range of this setting is 00 through 09; 00 is the minimum time, while 09 is the maximum time. The Factory Setting is 05.

34 Mystery Time
The operator can choose (via the Credit button) how long the MYSTERY Lamp remains lighted. The player must pass through a flipper lane to light the lamp on the opposite side (left lane passage lights right lamp), and then make the ramp shot where the lamp is lit. The range of this setting is 00 through 09; 00 is the minimum time (1 second), while 09 is the maximum time (10 seconds). The Factory Setting is 05.

35 Magnet (Magna-save™) Time
The operator can choose (via the Credit button) the time period alloted for each Magna-save™ lamp. The range of this setting is 00 through 09; 00 is the minimum time (1 second), while 09 is the maximum time (3 seconds). The Factory Setting is 05.

36 Speed50 Memory
The operator can choose (via the Credit button) the length of time the 50,000 arrow lamp remains lit, after a ball goes through the cave. The player then must hit the target ahead of the lighted 50,000 arrow lamp, within the selected time. The range of this setting is 00 through 09; 00 is the minimum time (1 /2 second), while 09 is the maximum time (3 seconds). The Factory Setting is 03.

37 Bonus Multiplier Memory
The operator can choose (via the Credit button) whether the Bonus Multipliers are retained in memory. Two choices are available:

1 - Bonus Multipliers are NOT retained in memory. The player 4 display shows this choice as NO. This is the Factory Setting.
2 - Bonus Multipliers ARE retained in memory, IF under 10X. (Player 4 shows YES.)

38 3 Bank Award Memory
The operator can choose (via the Credit button) whether the 3 Bank Awards are retained in memory. Two choices are available:

1 - Cave value and Special awards are NOT retained in memory. The player 4 display shows this choice as NO. This is the Factory Setting.
2 - Cave value and Special awards, but NOT Extra Ball, ARE retained in memory. (Player 4 shows YES.) (Control of the Extra Ball award is via Ad 41.)

39 A / B Completion Difficulty

The operator can choose (via the Credit button) the difficulty for lighting the A/B lamps. Two choices are available:

1 - Any A or B ramp shot lights the lamp for that ramp; a second shot lights the other lamp. This is the "easy" setting. The player 4 display shows this choice as NO. This is the Factory Setting.
2 - Only a shot up the A ramp lights the A lamp; only a shot up the B ramp lights the B lamp. This is the "hard" setting. (Player 4 shows this choice as YES.)

40 Attract Mode - Sound

The operator can choose (via the Credit button) whether the rhythmic sounds can be heard approximately every 3-1/2 minutes during the Attract Mode. Two choices are available:

1 - The Attract Mode sounds can be heard. The player 4 display shows this choice as YES. This is the Factory Setting.
2 - NO Attract Mode sound can be heard. (Player 4 shows NO.)

41 Extra Ball Memory

The operator can choose (via the Credit button) whether the lighted Extra Ball arrows remain in memory from ball to ball. Two choices are available:

1 - The Extra Ball arrow remains in memory from ball to ball. The player 4 display shows this choice as YES. This is the Factory Setting.
2 - The Extra Ball arrows do NOT remain in memory from ball to ball. (Player 4 shows NO.)

42 Ramp Completion Memory

The operator can choose (via the Credit button) whether the awards for completion of the A/B ramps remains in memory from ball to ball. Two choices are available:

1 - The Ramp completion does NOT remain in memory from ball to ball. The player 4 display shows this choice as NO. This is the Factory Setting.
2 - The Ramp completion DOES remain in memory from ball to ball. (Player 4 shows YES.)

43 L-I-Z-A-R-D Completion Spots A/B

The operator can choose (via the Credit button) whether L-I-Z-A-R-D completion spots the A/B lamp. Two choices are available:

1 - Completion of L-I-Z-A-R-D DOES spot the A lamp or the B lamp. The player 4 display shows this choice as YES. This is the Factory Setting.
2 - Completion of L-I-Z-A-R-D does NOT spot the A/B lamp. (Player 4 shows NO.)

44 3 Bank Awards Difficulty

The operator can choose (via the Credit button) the difficulty for obtaining the 3 Bank Awards. Difficulty is a function of the timing selection (Ad 33) for the 3 Bank. Three choices are available:

1 - No timing affects the operation of the 3 Bank. The player 4 display shows this choice as EASY.
2 - The timing selection of Ad 33 affects the shot for the Extra Ball and the Special. (Player 4 shows this as HARD. This is the Factory Setting.
3 - All 3 Bank awards are timed. (Player 4 shows HARDER.)

45 UNUSED ADJUST

This adjustment is not used for *GRAND LIZARD.*

46 UNUSED ADJUST

This adjustment is not used for *GRAND LIZARD.*

47 UNUSED ADJUST

This adjustment is not used for *GRAND LIZARD.*

48 UNUSED ADJUST

This adjustment is not used for *GRAND LIZARD.*

49 Custom Message

The operator can choose (via the Credit button) whether to display a message during the Attract Mode. (When display of a message is selected, the operator can either utilize the message provided or change the message.) Three choices are available:

1 - Display a message during the Attract Mode. The player 4 display shows this choice as ON. This is the Factory Setting. The 3-line message provided is:
BEWARE THE- LEGEND OF THE- GRAND LIZARD.

2 - Do NOT display a message during the Attract Mode. (Player 4 shows OFF.)

3 - The player 4 display shows this choice as CHANGE. The operator can enter a special ("custom") message, as follows:

A. Press ADVANCE once. The operator can now enter as many as three 14-character lines for display during the Attract Mode.

B. Use the Magna-save™ button(s) to select each message character (alphabet, numbers, and special symbols are available). In case of error, enter a "back arrow" (just before "space") to correct, followed by correct character. For a period after any letter, use letters with periods (following the special symbols). The entire character set is the following:
A B C D E F G H I J K L M N O P Q R S T U V W X Y Z 0 1 2 3 4 5 6 7 8 9 < > ? - / * '
A. B. C. D. E. F. G. H. I. J. K. L. M. N. O. P. Q. R. S. T. U. V. W. X. Y. Z. _

C. Move to the next character via the Credit button. No entirely blank lines will be displayed.

50 SW. ALARM BELL

The operator can choose (via the Credit button) whether the bell operates, sounding an alarm to signal a switch problem, at the time of game Turn-On and at the beginning of the Test/Diagnostic Procedures. Two choices are available:

1 - The bell sounds, signalling a switch problem, at game Turn-On and at the beginning of the Test/Diagnostic Procedures. The player 4 display shows this choice as YES. This is the Factory Setting.

2 - The bell does NOT sound. (Player 4 shows NO.)

51 ENGLISH TEXT

The operator can choose to display the message, audit, adjustment, and Test /Diagnostic information in English or German (Deutsch) via the Credit button.

52 UNUSED ADJUST

This adjustment is not used for *GRAND LIZARD.*

SPECIAL PRESET ADJUSTMENTS CAUTION

Adjustments 53 through 66 are Special Preset Adjustments to enable the operator to perform the setting of multiple adjustments at once. They permit the operator to: (1) modify a game for a specific area (special German coinage settings, for example, Ad 53 through 58); (2) change a group of adjustments to conform with laws of certain localities (Ad 59 through 61); and (3) to change the degree of difficulty of game play (Ad 62 through 66). A list of the preceding individual Adjustments affected accompanies each of these Special Preset Adjustments. Whenever the operator chooses to use any Special Preset Adjustment, the operator can later access any or all of the individual Adjustments affected by that Special Adjustment for subsequent changes.

A similar technique is recommended in the event of error or uncertainty concerning any Special Preset Adjustment, after the operator selects it: The operator can restore the factory setting of each individual Adjustment, then select the desired Special Preset Adjustment, and then return to any of the preceding individual adjustments to determine whether use of the Special Adjustment has had the desired effect.

The Backbox displays for each Special Preset Adjustment indicate whether the operator has selected it, by identifying the Adjustment in the player 1 and 2 displays by name and the selection choice of NO, meaning Not Selected (this is the Factory Setting), or YES, meaning Selected, in the player 4 display. Selection occurs by using the Credit button to choose YES and then pressing ADVANCE.

53 Install German 1

The operator can modify the game pricing selection of Standard Setting 09 in the **Pricing Table** to permit Credit Award play with 10 games for 5 DM. Individual Adjustments are affected, as follows:

Ad	Name	New Setting	Ad	Name	New Setting
01	Auto Replay	15	15	Backup Hi Scr 2	3,500,000
02	Replay Start	1,000,000	16	Backup Hi Scr 3	3,000,000
03	Replay Levels	1	17	Backup Hi Scr 4	2,500,000
06	Replay Award	Credit	18	Hi Scr 1 Credits	03
07	Special Award	Credit	19	Hi Scr 2 Credits	00
08	Match Feature	On	20	Hi Scr 3 Credits	00
12	Maximum Credits	30	21	Hi Scr 4 Credits	00
14	Backup Hi Scr 1	4,000,000	24	German 1 Coinage	10 Plays/5DM

Note: This Special Preset Adjustment is automatically installed, when the CPU Board jumper W7 is cut or removed, AND the Factory Setting is requested.

54 Install German 2

The operator can modify the game pricing selection of Standard Setting 09 in the **Pricing Table** to permit Ticket/Token operation with 10 games for 5 DM. Individual Adjustments are affected, as follows:

Ad	Name	New Setting	Ad	Name	New Setting
06	Replay Award	Coil	17	Backup Hi Scr 4	2,500,000
07	Special Award	Ball	18	Hi Scr 1 Credits	03
08	Match Feature	On	19	Hi Scr 2 Credits	00
14	Backup Hi Scr 1	4,000,000	20	Hi Scr 3 Credits	00
15	Backup Hi Scr 2	3,500,000	21	Hi Scr 4 Credits	00
16	Backup Hi Scr 3	3,000,000	24	German 1 Coinage	10 Plays/5DM

55 Install German 3

The operator can modify the game pricing selection of Standard Setting 09 in the **Pricing Table** to permit Keyset Mode operation with 10 games for 5 DM. Individual Adjustments are affected, as follows:

Ad	Name	New Setting	Ad	Name	New Setting
06	Replay Award	Audit	17	Backup Hi Scr 4	00
07	Special Award	Score	18	Hi Scr 1 Credits	00
08	Match Feature	Off	19	Hi Scr 2 Credits	00
14	Backup Hi Scr 1	00	20	Hi Scr 3 Credits	00
15	Backup Hi Scr 2	00	21	Hi Scr 4 Credits	00
16	Backup Hi Scr 3	00	24	German 1 Coinage	10 Plays/5DM

56 Install German 4

The operator can modify the game pricing selection of Standard Setting 09 in the **Pricing Table** to permit Credit Award play with 6 games for 5 DM. Individual Adjustments are affected, as follows:

Ad	Name	New Setting	Ad	Name	New Setting
06	Replay Award	Credit	17	Backup Hi Scr 4	2,500,000
07	Special Award	Credit	18	Hi Scr 1 Credits	03
08	Match Feature	On	19	Hi Scr 2 Credits	00
14	Backup Hi Scr 1	4,000,000	20	Hi Scr 3 Credits	00
15	Backup Hi Scr 2	3,500,000	21	Hi Scr 4 Credits	00
16	Backup Hi Scr 3	3,000,000	24	German 1 Coinage	6 Plays/5DM

57 Install German 5

The operator can modify the game pricing selection of Standard Setting 09 in the **Pricing Table** to permit Ticket/Token operation with 6 games for 5 DM. Individual Adjustments are affected, as follows:

Ad	Name	New Setting	Ad	Name	New Setting
06	Replay Award	Coil	17	Backup Hi Scr 4	2,500,000
07	Special Award	Ball	18	Hi Scr 1 Credits	03
08	Match Feature	On	19	Hi Scr 2 Credits	00
14	Backup Hi Scr 1	4,000,000	20	Hi Scr 3 Credits	00
15	Backup Hi Scr 2	3,500,000	21	Hi Scr 4 Credits	00
16	Backup Hi Scr 3	3,000,000	24	German 1 Coinage	6 Plays/5DM

58 Install German 6

The operator can modify the game pricing selection of Standard Setting 09 in the ***Pricing Table*** to permit Keyset Mode operation with 6 games for 5 DM. Individual Adjustments are affected, as follows:

Ad	Name	New Setting	Ad	Name	New Setting
06	Replay Award	Audit	17	Backup Hi Scr 4	00
07	Special Award	Score	18	Hi Scr 1 Credits	00
08	Match Feature	Off	19	Hi Scr 2 Credits	00
14	Backup Hi Scr 1	00	20	Hi Scr 3 Credits	00
15	Backup Hi Scr 2	00	21	Hi Scr 4 Credits	00
16	Backup Hi Scr 3	00	24	German 1 Coinage	6 Plays/5DM

59 Install Add A Ball

The operator can utilize this option to delete all Free Play awards and replace them with Extra Ball awards. Individual Adjustments are affected, as follows:

Ad	Name	New Setting	Ad	Name	New Setting
06	Replay Award	Ball	19	Hi Scr 2 Credits	00
07	Special Award	Ball	20	Hi Scr 3 Credits	00
08	Match Feature	Off	21	Hi Scr 4 Credits	00
18	Hi Scr 1 Credits	00			

60 Install 5 Ball

The operator can change the game to 5-Ball play, including the changing of certain features to the recommended 5-Ball play difficulty level. Individual Adjustments are affected, as follows:

Ad	Name	New Setting	Ad	Name	New Setting
09	Balls / Game	05	38	Memory 3 Bank	No
37	Memory B. Mults	No	42	A/B Memory	No

61 Install Novelty

The operator can remove all Free Play and Extra Ball awards. Individual Adjustments are affected, as follows:

Ad	Name	New Setting	Ad	Name	New Setting
01	Fixed Replay		08	Match Feature	Off
02	Replay Level 1	Off	11	No Extra Ball	No
03	Replay Level 2	Off	18	Hi Scr 1 Credits	00
04	Replay Level 3	Off	19	Hi Scr 2 Credits	00
05	Replay Level 4	Off	20	Hi Scr 3 Credits	00
06	Replay Award	Audit	21	Hi Scr 4 Credits	00
07	Special Award	Score			

62 Install Extra Easy

The operator can change the game play difficulty adjustments to a combination that is extremely easy (sometines called "liberal"). Individual Adjustments are affected, as follows:

Ad	Name	New Setting	Ad	Name	New Setting
31	4 Bank Cycle	06	37	Memory B. Mults	Yes
32	4 Bank Timeout	07	38	Memory 3 Bank	Yes
33	3 Bank Timeout	08	39	Ramp Spot A. B.	Yes
34	Mystery Time	07	42	A/B Memory	Yes
35	Magnet Time	07	43	L.I.Z.A.R.D. Spot A.B.	Yes
36	Speed50 Time	06	44	3 Bank Awards	Easy

63 Install Easy

The operator can change the game play difficulty adjustments to a combination that is slightly easier than the Factory Settings. Individual Adjustments are affected, as follows:

Ad	Name	New Setting	Ad	Name	New Setting
31	4 Bank Cycle	04	37	Memory B. Mults	No
32	4 Bank Timeout	05	38	Memory 3 Bank	Yes
33	3 Bank Timeout	07	39	Ramp Spot A. B.	No
34	Mystery Time	06	42	A/B Memory	Yes
35	Magnet Time	05	43	L.I.Z.A.R.D. Spot A.B.	Yes
36	Speed50 Time	04	44	3 Bank Awards	Hard

64 Install Medium

The operator can change the game play difficulty adjustments to a combination that matches the Factory Settings. Individual Adjustments are affected, as follows:

Ad	Name	New Setting	Ad	Name	New Setting
31	4 Bank Cycle	04	37	Memory B. Mults	No
32	4 Bank Timeout	05	38	Memory 3 Bank	No
33	3 Bank Timeout	05	39	Ramp Spot A. B.	No
34	Mystery Time	05	42	A/B Memory	Yes
35	Magnet Time	05	43	L.I.Z.A.R.D. Spot A.B.	Yes
36	Speed50 Time	03	44	3 Bank Awards	Hard

65 Install Hard

The operator can change the game play difficulty adjustments to a combination that is more difficult than the Factory Settings. Individual Adjustments are affected, as follows:

Ad	Name	New Setting	Ad	Name	New Setting
31	4 Bank Cycle	03	37	Memory B. Mults	No
32	4 Bank Timeout	04	38	Memory 3 Bank	No
33	3 Bank Timeout	04	39	Ramp Spot A. B.	No
34	Mystery Time	04	42	A/B Memory	Yes
35	Magnet Time	03	43	L.I.Z.A.R.D. Spot A.B.	No
36	Speed50 Time	03	44	3 Bank Awards	Harder

66 Install Extra Hard

The operator can change the game play difficulty adjustments to a combination that is much more difficult than the Factory Settings. Individual Adjustments are affected, as follows:

Ad	Name	New Setting	Ad	Name	New Setting
31	4 Bank Cycle	02	37	Memory B. Mults	No
32	4 Bank Timeout	03	38	Memory 3 Bank	No
33	3 Bank Timeout	03	39	Ramp Spot A. B.	No
34	Mystery Time	03	42	A/B Memory	No
35	Magnet Time	02	43	L.I.Z.A.R.D. Spot A.B.	No
36	Speed50 Time	02	44	3 Bank Awards	Harder

67 Auto Burn-In

The operator can choose the YES option for this Special Preset Adjustment to perform certain automatic testing of the game, as used in the factory. It does not affect the game operation, but merely provides for a cyclic testing of most of the game's mechanisms.

68 Clear Coins

The operator can request the clearing of the coinage audits (Au 01 through 04) by selecting (via the Credit button) the YES option, as shown in the player 4 display. This adjustment zeroes the counters tallying the number of coins through each slot, the Paid Credits counter, and the Credits display.

After the YES option is displayed, the operator must press the ADVANCE button. The game then displays COINS CLEARED.

69 Clear Audits

The operator can request the clearing of the non-coinage audits (Au 05 through 38) by selecting (via the Credit button) the YES option, as shown in the player 4 display. This Adjustment zeroes the counters tallying the remaining Audit factors. Please note that this does NOT affect the Automatic Replay Percentaging data nor the automatic High Score Reset counter.

After the YES option is displayed, the operator must press the ADVANCE button. The game then displays AUDITS CLEARED.

70 Install Factory

The operator can request the game to provide the normal Factory Settings to restore the game to its 'factory condition'. This Adjustment clears all Audits, resets all Game Adjustments to the respective Factory Settings, and provides a restart of the Auto Replay (Ad 01).

After the YES option is displayed, the operator must press the ADVANCE button. The game then displays FACTORY SETTING.

Closing of the coin door before appearance of the FACTORY SETTING message or a problem in the Memory Protect circuit will cause the game to display ADJUST FAILURE.

A loss of battery power or improper treatment of the Game Adjustments will cause the game to attempt to restore Factory Settings. The game announces the results of this reset process with the appropriate message, FACTORY SETTING or ADJUST FAILURE.

RESETTING THE HIGH SCORES

The challenge of exceeding the High Score (either the factory setting or a higher score by another player) is the goal of many pinball game players. To keep a pinball game challenging requires a method of resetting the High Score value for those occasions when a skilled player registers a truly excellent score. Other players note this score and may decide not to play simply because their skill is not adequate to exceed an extremely high score.

For *GRAND LIZARD*, in fact, three methods of resetting the High Score values are available. The simplest method involves allowing Game Adjustment Item Ad 22 to reset the High Score values automatically after the specified number of plays designated by the operator. The second method requires pressing the High Score Reset switch on the inside of the coin door in the Attract Mode. This action simply erases the previous high score values and replaces them with the Backup High Score values. The third method establishes new values replacing the factory setting values or previous operator setting values; it requires performing the following steps:

1. Using AUTO-UP or MANUAL-DOWN, reach item Ad 14 (and items Ad 15, 16, and 17, if desired). The High Score value of the factory setting (or previous operator-adjusted setting) appears in the player 1 display. If this value is satisfactory, go to step 4 below.

2. If you wish to increase the High Score value from that displayed in the player 1 display, use AUTO-UP, and press the Credit button, until the desired value shows in the player 1 display.

3. If you wish to decrease the High Score value, use MANUAL-DOWN, and press the Credit button, until the desired value shows in the player 1 display.

4. Using AUTO-UP, press and hold down ADVANCE, until the Credits display shows Ad and the BALL IN PLAY/MATCH display shows item 70. Press ADVANCE once, to return to Game-Over Mode.

5. Press the High Score Reset switch (on coin door), and listen for the sound signifying that the score reset action is complete. Observe player score displays (player 1, player 2, etc.) to verify that the new High Score values are displayed.

GAME PRICING

PRICING MADE EASY. Game Adjustment Item Ad 24 allows the operator an easy method of setting the pricing functions. If the operator enters a "Standard Setting" number (from 01 to 16) into Adjustment Item 24, each of the other pricing items (25 through 30) changes to the value shown in the ***Pricing Table*** for that selected "Standard Setting".

CUSTOM PRICING. Adjustment Item 24 must be set to the Custom Coinage Setting (player 1 and 2 displaying CUSTOM COINAGE) to enable the operator to enter desired custom pricing selections for Items 25 through 30, based on the ***Pricing Table.*** Item 25 is the left coin chute multiplier. Item 26 is the center coin chute multiplier. Item 27 is the right coin chute multiplier. Item 28 is the number of coin units equal to one Credit. (A Credit is usually equal to one game.)

The calculation of the ratio of Games : Price uses the ratio equation of X : VC , where:

X = Coin Chute Multiplier (Item 25, 26, or 27 in ***Pricing Table***);
V = Value of coin;
C = Coin units eqivalent to one Credit (Item 28).

For example, for 25¢ chutes at the factory setting, substituting values in the Games : Price ratio calculation gives 1 : 25 x 1, or one game for 25¢.

UNITS REQUIRED FOR BONUS CREDIT. Item 29 is the number of coin units that must pass through the coin chute(s) before an additional Credit (game) is posted (displayed). At the factory setting, the number in this item is 00. (This 00 means that NO bonus credit (free game) is awarded, although purchase of more than one game at a time occurs.)

MINIMUM COIN UNITS. Item 30 determines the number of coin units that must pass through the coin chute(s) before play may begin. The factory setting for this item is 00. (This 00 means that the Minimum Coin Units feature (Item 30) is disabled, by the factory setting.)

GAME PRICING (Continued)

Pricing Table

Country	Coin Chute Left	Coin Chute Center	Coin Chute Right	Games/Coin	Pricing Functions 24	25	26	27	28	29	30
USA and Canada	25¢	-	25¢	1/25¢, 4/$1 [1,2]	01	01	04	01	01	00	00
				1/50¢, 2/$1 [2]	03	01	04	01	02	00	00
				2/25¢, 8/$1	00	02	00	02	01	00	00
				1/25¢, 3/50¢, 6/$1 [2]	04	01	04	01	01	02	00
				1/25¢, 5/$1	00	01	00	01	01	04	00
				1/50¢, 3/$1 [2]	02	01	04	01	02	04	00
West Germany	1 DM	2 DM	5 DM	1/1 DM, 3/2 DM, 10/5 DM [2,3]	09	09	18	45	05	45	00
				1/1 DM, 2/2 DM, 6/5 DMark [2]	10	06	12	30	05	00	00
				1/1 DM, 3/2 DM, 9/5 DM	00	09	18	45	05	00	00
				1/2x1 DM, 1/2 DM, 3/5 DM [2]	11	03	06	15	05	00	00
				2/1 DM, 5/2 DM, 14/5 DM [2]	12	13	26	65	05	65	00
				Ticket/Token Mode [4]							
				Keyset Mode [4]							
France	1 F	5 F	10 F	1/3x1 F, 2/5 F, 5/10 Franc [2]	13	02	10	20	05	20	00
Antilles (Netherlands)	25¢	-	1 G	1/25¢, 4/1 Guilder	00	01	01	04	01	00	00
Netherlands	25¢	-	1 G	1/25¢, 5/1 Guilder	00	01	00	05	01	00	00
Belgium	5 F	-	20 F	1/2x5 F, 2/20 Franc [2]	08	01	01	04	02	00	00
	5 F	5 F	20 F	1/2X5 F, 1/2X5 F, 2/20 F [2]	08	01	01	04	02	00	00
	5 F	20 F	20 F	1/2x5 F, 2/20 F, 2/20 F [2]	00	01	04	04	02	00	00
Spain	25 P	-	100P	1/25 P, 5/100 Peseta [2]	15	01	00	05	01	00	00
Switzerland	1 F	2 F	5 F	1/1 F, 3/2 F, 7/5 Franc	00	02	06	14	02	00	00
	1 F	-	2 F	1/1 F, 3/2 F [2]	07	03	00	06	02	00	00
Japan	100 ¥	-	100 ¥	2/100 Yen	00	04	00	04	02	00	00
	-	100 ¥	-	2/100 ¥ [2]	16	01	04	01	02	00	00
Italy	100 L	-	100 L	1/200 Lire [2]	14	01	04	01	02	00	00
Australia	20¢	-	$1	1/2x20 ¢, 3/$1 [2]	05	01	00	06	02	00	00
United Kingdom	10 P	50 P	20 P	1/10 P, 5/50 P, 2/20 Pence	00	01	05	02	01	00	00
	10 P	50 P	10 P	1/10 P, 5/50 P [2]	06	01	05	01	01	00	00
Argentina	10¢	10¢	10¢	1/1 Token	00	01	01	01	01	00	00
Austria	5 Sch	-	10 Sch	2/5 Sch, 5/10 Schilling	00	02	00	05	01	00	00
	1 Sch	5 Sch	10 Sch	2/5x1 Sch, 2/5 Sch, 5/10 Sch	00	02	10	25	05	00	00
Chile	Token	-	Token	1/1 Token [1,2]	01	01	04	01	01	00	00
Denmark	1 Kr	5 Kr	10 Kr	1/2x1 Kr, 3/5 Kr, 7/10 Krone	00	01	06	14	02	00	00
Finland	1 Mka	-	1 Mka	1/1 Markka [1,2]	01	01	04	01	01	00	00
New Zealand	20¢	-	20¢	1/2x20¢ [2]	03	01	04	01	02	00	00
Norway	1 Kr	-	1 Kr	1/2x1 Kr, 3/5x1 Krone	00	01	00	01	02	05	00
Sweden	1 Kr	-	1 Kr	1/2x1 Krona [2]	03	01	04	01	02	00	00

Notes: 1. Factory Default. 2. Standard Setting - Adjust setting of Item 24 ONLY. 3. Default with jumper W7 cut/removed. 4. Other functions are also affected; see the explanations for Adjustment items 53 through 58.

TEST/DIAGNOSTIC PROCEDURES

WILLIAMS ELECTRONICS GAMES provides a series of diagnostic tests to aid the operator in determining game condition (that is, whether the game's features and highlights are operating satisfactorily). These tests activate virtually all the electronic and electromechanical devices comprising the game, so that the operator can readily locate a malfunctioning device or simply verify that all devices are working properly. In order, these tests deal with the music, the displays, the game sounds, the lamps, the solenoids, and the switches.

In addition to the diagnostic testing, a feature called the Auto Burn-in Mode is available. Activating this mode enables the operator to observe the game while all of the diagnostic tests, *except the switch test,* occur. This can be very helpful in locating intermittent problems.

Activating either the entire test series or one of the individual tests requires use of the Game Adjustment/ Diagnostic switches. Open the coin door for access to these switches. To proceed to the Diagnostic Tests, the operator must simply switch the game On, set the AUTO-UP/MANUAL-DOWN switch to MANUAL-DOWN, and press the ADVANCE button.

CAUTION

GRAND LIZARD's System 11 game program has a new capability to aid the operator and service personnel: When the operator is beginning the Test/Diagnostic Procedures (and also at game Turn-On), a display now signals when a switch has NOT been actuated during ball play for a lengthy period of time (60 balls, or 20 games). However, for the Switch Problem Reporting activity at the beginning of the Test/Diagnostic Procedures, the display of problem switches is *not* limited to just three switches; it now includes *ALL* switches exhibiting problems. Refer to the text on Switch Tests for additional information. To proceed with the Test/Diagnostic Procedures, use AUTO-UP, and press ADVANCE.

MUSIC TEST.

1. In the Music Test, observe that the player 1 and 2 displays show the message, MUSIC TEST. Adjust the volume control for proper sound level for the game location.

2. Use the AUTO-UP position.

DISPLAY TEST.

1. To initiate the Display Test, press ADVANCE. Observe that player 1 and 2 displays briefly show the message, DISPLAY TEST, and that the Credits display shows 00 (the Display Test identifier).

2. Use AUTO-UP. Observe that all displays begin a display cycle of all 0s through all 9s, one digit at a time. Verify that the proper comma segments light during display of the odd-numbered digits. Next, a special "all segments" character 'walks' from left to right across each display (player 1, 2, 3, 4, BALL IN PLAY/MATCH, Credits).

3. To halt the display cycle, use MANUAL-DOWN. Then, press ADVANCE to step through the sequential digit display, digit by digit, and the subsequent "all segments" characters display test. Use AUTO-UP to resume cycling, and to proceed to the next test.

SOUND TEST.

1. (From Display Test) To initiate the Sound Test, press ADVANCE. Observe that the player 1 and 2 displays show the message, SOUND TEST, and that the Credit display shows 01 (the Sound Test identifier). The BALL IN PLAY/MATCH display shows a series of test steps from 00 through 07. Verify that a different sound is heard each time the number in the BALL IN PLAY/MATCH display changes.

2. To repeatedly pulse a single sound, use MANUAL-DOWN. Verify that one particular sound repeats. Press ADVANCE to step to the next sound, which repeats until ADVANCE is pressed again. Use AUTO-UP to resume cycling the sounds, and to proceed to the next test.

LAMP TESTS.

1. **All Lamps.**
   (From Sound Test) To initiate the first Lamps Test, press ADVANCE. Observe that the player 1 and 2 displays show the message, ALL LAMPS, and that the Credit display shows 02 (All Lamps Test identifier) and that all feature lamps (playfield and backbox) blink on and off. (Note, however, that the General Illumination lamps remain lighted steadily.) To locate the wiring associated with a particular lamp, refer to the **Lamp-Matrix Table.** CPU Board connections at jacks 1J6 (columns) and 1J7 (rows) are also listed in the table.

LAMP TESTS (Continued)

2. **Single Lamps.**
From the All Lamps test, using AUTO-UP, press ADVANCE to enable *GRAND LIZARD* to initiate the Single Lamps Test. The player 1 and 2 displays initially show the message, SINGLE LAMPS, and the Credit display shows 03. Then, the BALL IN PLAY/ MATCH display shows 01 and the player 1 and 2 displays show GAME OVER, the name of the lamp currently blinking. Press the Credit button to proceed through an ascending series of designator numbers (01 through 64), with the player 1 and 2 displays showing the individual lamp's name. Press and hold the Credit button to proceed rapidly to the desired lamp.

GRAND LIZARD Lamp-Matrix Table

COLUMN / ROW	1 Q66 YEL-BRN 1J7-1	2 Q64 YEL-RED 1J7-2	3 Q62 YEL-ORN 1J7-3	4 Q60 YEL-BLK 1J7-4	5 Q58 YEL-GRN 1J7-6	6 Q56 YEL-BLU 1J7-7	7 Q54 YEL-VIO 1J7-8	8 Q52 YEL-GRY 1J7-9
Q80 1 RED-BRN 1J6-1	Game Over 1	4X 9	5 17	All Scores 2X 25	Multi-Ball Arrow (middle) 33	Special (Bottom Right Standup) 41	Left Drain 49	4-Bank 20K 57
Q81 2 RED-BLK 1J6-2	Match 2	5X 10	6 18	All Scores 3X 26	Multi-Ball Arrow (upper) 34	Left Magnet (lower) 42	Right Drain 50	4-Bank 40K 58
Q82 3 RED-ORN 1J6-3	Sword 3	10X 11	7 19	Bonus Holdover Collected 27	L 35	Left Magnet (middle) 43	Not Used 51	4-Bank 60K 59
Q83 4 RED-YEL 1J6-5	Sword 4	Shoot Again (Playfield) 12	8 20	Spinner 28	I 36	Left Magnet (upper) 44	Left Ramp Mystery 52	4-Bank 80K 60
Q84 5 RED-GRN 1J6-6	Ball in Play 5	1 13	9 21	Right Ramp B 29	Z 37	Right Magnet (lower) 45	Extra Ball (top) 53	4-Bank 100K 61
Q85 6 RED-BLU 1J6-7	Shoot Again (Backbox) 6	2 14	10 22	Lane to Top Bonus Holdover Arrow 30	A 38	Right Magnet (middle) 46	Turn 10K 54	Top Right 50K 62
Q86 7 RED-VIO 1J6-8	2X 7	3 15	20 23	Left Ramp A 31	R 39	Right Magnet (upper) 47	Turn 20K 55	Top Right Release 63
Q87 8 RED-GRY 1J6-9	3X 8	4 16	Extra Ball (bottom) 24	Multi-Ball Arrow (lower) 32	D 40	Right Ramp Mystery 48	Turn 40K 56	3-Bank Special 64

"On" State Logic - Special Solenoid

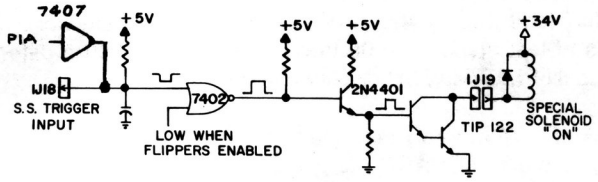

"Off" State - Special Solenoid:
The Special Switch Trigger Input goes low. Meanwhile, the PIA line remains high. The remaining signals reverse their states.

"On" State Logic - Controlled Solenoid

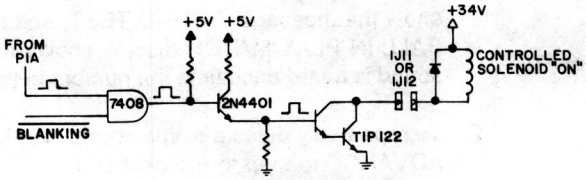

"Off" State - Controlled Solenoid:
The Enable Input (from the PIA) goes low. Meanwhile, the BLANKING signal remains high. The rest of the signals reverse their states.

SOLENOID TEST.

1. (From Lamp Test) Using AUTO-UP, press ADVANCE. Observe that the player 1 and 2 displays show the message, COIL TEST, the Credit display shows 04 (Solenoid Test identifier). Next, the BALL IN PLAY/ MATCH display shows a series of test steps from 01 through 22, while the player 1 and 2 displays show the name of the solenoid. During each of these steps, pulsing of the respective solenoid occurs. The test cycles repeatedly, unless halted via the MANUAL-DOWN switch. Refer to the **Solenoid Table** for solenoid numbers and wiring information. CPU Board connections at 1P11, 1P12, and 1P19 are also listed in the table.

   To continuously pulse a single solenoid, use MANUAL-DOWN. Press ADVANCE to sequence through the controlled and special solenoids. Use AUTO-UP to resume test cycling, and to proceed to the next test.

GRAND LIZARD Solenoid Table

Sol. No.	Function	Solenoid Type	Wire[1] Color	Connections: CPU Bd.	Connections: Playfield/ Cabinet	Driver Trans.	Solenoid Part No.
01	Trough Kicker (Outhole)	Controlled	Gry-Brn	1P11-1	8P3-1	Q33	AE-23-800-01
02	3-Bank Raise	Controlled	Gry-Red	1P11-3	8P3-2	Q25	AE-23-800-04
03	4-Bank Raise 1 (left 2 targets)	Controlled	Gry-Orn	1P11-4	8P3-3	Q32	AE-23-800-04
04	4-Bank Raise 2 (right 2 ")	Controlled	Gry-Yel	1P11-5	8P3-4	Q24	AE-23-800-04
05	Lockup Eject (Multi-Ball)	Controlled	Gry-Grn	1P11-6	8P3-5	Q31	AE-23-800-03
06	Lockup Flasher	Controlled	Gry-Blu	1P11-7	8P3-6	Q23	#63 flashlamps
07	Left Magnet Flasher	Controlled	Gry-Vio	1P11-8	8P3-7	Q30	#63 flashlamps
08	Ball Feed	Controlled	Gry-Blk	1P11-9	8P3-8	Q22	AE-23-800-03
09	Left Magnet	Controlled	Brn-Blk	1P12-1	8P3-9	Q17	5580-09613-00
10	Right Magnet	Controlled	Brn-Red	1P12-2	8P3-10	Q9	5580-09613-00
11	General Illumination Relay	Controlled	Brn-Orn	1P12-4	3P7-1	Q16	5580-09555-00
12	3-Bank Flasher	Controlled	Brn-Yel	1P12-5	8P3-12	Q8	#63 flashlamps
13	Eyes (Backbox & Head)	Controlled	Brn-Grn	1P12-6	8P3-13, 9P1-13	Q15	#63 flashlamps
14	Credit Knocker (or Token	Controlled	Brn-Blu	1P12-7	Backbox	Q7	AE-23-800-02
15	Bell Dispenser)	Controlled	Brn-Vio	1P12-8	7P1-17	Q14	SM-29-1000-DC
16	Coin-Lockout Relay	Controlled	Brn-Gry	1P12-9	7P1-18,7P4-4	Q6	404603-2[2]
17	Left Kicker	Special #1	Blu-Brn	1P19-7	8P3-17	Q75	AE-23-800-03
18	Right Kicker	Special #2	Blu-Red	1P19-4	8P3-18	Q71	AE-23-800-03
19	Right Magnet Flasher	Special #3	Blu-Orn	1P19-3	8P3-19	Q73	#63 flashlamps
20	Not Used	Special #4					
21	Not Used	Special #5					
22	Not Used	Special #6					
-	Upper Right Flipper	-	(Blk-Yel)		(7J1-31,8P3-33)[3]	-	FL24/600-30/2600-50VDC
-	Right Flipper	-	Orn-Vio (Blu-Vio)	1P19-1	7P1-7 (7J1-8,8P3-34)[3]	-	FL23/600-30/2600-50VDC
-	Upper Left Flipper	-	(Blk-Blu)		(7J1-30,8P3-31)[3]	-	FL24/600-30/2600-50VDC
-	Left Flipper	-	Orn-Gry (Blu-Gry)	1P19-2	7P1-9 (7J1-10,8P3-32)[3]	-	FL23/600-30/2600-50VDC

Notes:
1. Wire colors, except flipper Orn-Vio and Orn-Gry, are ground connections (to coil terminal with unbanded end of diode). Flipper Orn-Vio and Orn-Gry wires connect from CPU Board to flipper switch.
2. Solenoid 16 has a Coinco part number.
3. Connections shown in parentheses are from flipper switch to flipper coil.

SWITCH TESTS.

1. **Switch Levels.**

   (From Solenoid Test) To initiate the Switch Levels Test, press ADVANCE. Observe that the player 1 and 2 displays show the message, SWITCH LEVELS, the Credit display shows 05 (Switch Levels Test identifier), and the BALL IN PLAY/MATCH display is blank, indicating that no switch is actuated.

   If, however, a switch *is* actuated (possibly stuck closed), the BALL IN PLAY/MATCH display shows that switch's number, while the player 1 and 2 displays indicate the switch's name. A sound also accompanies the displays. (This is another facet of the new *GRAND LIZARD System-11* switch testing capability.) If more than one switch is closed, each switch's name and number becomes a member of a series of displays, each showing the switches' names and numbers. (In addition, either of these problems could result in the reporting of a switch problem (or problems) at game Turn-On or at the beginning of Diagnostic Tests.)

   As soon as the operator opens a closed switch, its name and number are eliminated from the Switch Levels display series. For *GRAND LIZARD,* switch numbers can range from 01 through 48. Refer to the **Switch-Matrix Table** for switch numbers and wiring information. CPU Board connections at jacks 1J8

SWITCH TESTS (Continued).

(columns) and 1J10 (rows) are also listed in the table.

Row Problems. If a display of two (or more) switch numbers of a row occurs, although only one switch is closed, check for a short circuit between the column wires.

Multiple Switch Number Indications. Check the associated column wire for a short circuit to ground.

Column Problems. If display of two (or more) switch numbers in a column occurs (while only one switch is actuated), check for a short circuit between the row wires.

Use AUTO-UP to proceed to the next test.

GRAND LIZARD Switch-Matrix Table

COLUMN / ROW	1 Q45 GRN-BRN 1J8-1	2 Q49 GRN-RED 1J8-2	3 Q44 GRN-ORN 1J8-3	4 Q48 GRN-YEL 1J8-4	5 Q43 GRN-BLK 1J8-5	6 Q47 GRN-BLU 1J8-7	7 Q42 GRN-VIO 1J8-8	8 Q46 GRN-GRY 1J8-9
1 WHT-BRN 1J10-9	Plumb Bob Tilt 1	Playfield Tilt 9	Right Return Lane 17	3-Bank 25	Multi-Ball 2 33	Right Special Arrow 41	Not Used 49	Not Used 57
2 WHT-RED 1J10-8	Ball Roll Tilt 2	Outhole 10	Left Outlane 18	3-Bank 26	Multi-Ball 3 34	Ramp Tongue 42	Not Used 50	Not Used 58
3 WHT-ORN 1J10-7	Credit Button 3	Shooter Lane 11	Right Outlane 19	3-Bank 27	L 35	Left Kicker 43	Not Used 51	Not Used 59
4 WHT-YEL 1J10-6	Right Coin Chute 4	Ball Trough #1 (Lower Right) 12	4-Bank 20	Spinner 28	I 36	Right Kicker 44	Not Used 52	Not Used 60
5 WHT-GRN 1J10-5	Center Coin Chute 5	Ball Trough #2 (Center) 13	4-Bank 21	Right Ramp 29	Z 37	Left Magnet 45	Not Used 53	Not Used 61
6 WHT-BLU 1J10-3	Left Coin Chute 6	Ball Trough #3 (Upper Left) 14	4-Bank 22	Right Chute to Top 30	A 38	Right Magnet 46	Not Used 54	Not Used 62
7 WHT-VIO 1J10-2	Slam Tilt 7	Turnaround 15	4-Bank 23	Left Ramp 31	R 39	Not Used 47	Not Used 55	Not Used 63
8 WHT-GRY 1J10-1	High-Score Reset 8	Left Return Lane 16	Top Right Standup 24	Multi-Ball 1 32	D 40	Right Flipper (E O S) 48	Not Used 56	Not Used 64

2. **Switch Edges.**
From the Switch Levels Test, press ADVANCE. Observe that the player 1 and 2 displays show the message, SWITCH EDGES, the Credit display shows 06 (Switch Edges Test identifier), and the BALL IN PLAY/MATCH display is blank, indicating that no switch is actuated.

This test permits the operator to test whether actuating a switch provides the proper signal to the System-11 switch testing program. When actuating a switch, the operator should see the switch's name and number (in the player 1 and 2, and the BALL IN PLAY/MATCH displays, respectively). If no indication appears at the time the switch is actuated, the operator then knows that there is a malfunction associated with that switch.

Using this technique, the operator can test each switch appearing in the *GRAND LIZARD* switch problem reporting displays (either at game Turn-On or at the beginning of the Diagnostic Tests) to determine whether the switch can be actuated. If the switch's name and number are displayed while the operator checks its operation, the operator then knows that the reported problem with that switch is NOT currently caused by a switch malfunction. The operator can then seek other causes for the reported problem, being almost certain now that the switch did not fail. *This test is also useful when the operator is adjusting the sensitivity of a particular switch's actuation mechanism.*

SWITCH TESTS (Continued).

Among the possibilities is the fact that the players have not hit that switch because of some other problem; the operator should try to analyze what could cause the switch to be missed, and remedy that problem cause. With these new tests, switch problems are, therefore, more easily isolated.

Coin Chute Switches. During the Switch Edges test, the System-11 switch testing program energizes the coin lockout relays, to prevent testing actuations of the coin chute switches from affecting the data contained in the audit counters, thereby maintaining accurate records of the game's earnings.

3. *Playfield or CPU Board?* To determine whether a switch problem is in the playfield or the CPU Board, remove connectors 1P8 and 1P10 from the CPU Board. Begin the Switch Test. Use a jumper wire to simulate switch actuation. For example, placing a jumper between 1J10-9 and 1J8-2 should (based on the **Switch-Matrix Table**) should produce an indication of switch 09 being actuated.

ENDING THE DIAGNOSTIC TESTS.

To end the Diagnostic Tests, reach the Switch Edges Test (06 in the Credits display), use AUTO-UP and press ADVANCE. The backbox displays should show the *GRAND LIZARD* game's Identification Information. Use MANUAL-DOWN, and press ADVANCE to reach Adjustment Item 70 (INSTALL FACTORY). Use AUTO-UP and press ADVANCE to obtain the Attract Mode.

AUTO BURN-IN MODE.

The Auto Burn-in Mode permits the operator to check intermittent (or nonrecurring) problems associated with most portions of the game's circuitry. Repeatedly cycling through a group of tests can sometimes bring a problem, which occurs only randomly or occasionally, to exhibit itself more frequently, thereby aiding in the isolation of the problem. To activate the Auto Burn-in Mode:

1. While in the Game Adjustments, reach Ad 67 and change the Factory Setting of NO to YES, via the Credit button. Set the AUTO-UP/MANUAL-DOWN switch to AUTO-UP.

2. Press ADVANCE to start the Auto Burn-in Mode. This mode repeatedly sequences through the Music Test, the Display Test, the Sound Test, the All Lamps portion of the Lamp Test, and the Solenoid Test.

3. To halt the Auto Burn-in Mode, switch the game Off and then On. *GRAND LIZARD* now starts in the Attract Mode. (If a switch problem is now reported by the displays, perform the Switch Tests again to determine the nature of the problem; then, perform necessary repairs.)

SYSTEM-11 MEMORY CHIP TEST.

A new feature is now included in the Memory Chip Test for System 11. A diagnosis of the condition of the "blanking circuit" now occurs during this testing. (The "blanking circuit" protects the displays, lamps, and solenoids against a hardware malfunction.) The test requires approximately 1.5 seconds. Display of an 8 on the CPU Board LED during the test indicates that the "blanking circuit" operation is normal; display of a 0 during the test indicates that the "blanking circuit" is NOT functioning. Following the complete Memory Chip Test, one of indications listed in the **CPU LED Indicator Codes Table** should appear. To perform the test, press the CPU Diagnostic Switch (SW 2) on the edge of the CPU Board.

CPU LED Indicator Codes Table

Code	Code Meaning
0 [1]	Test Passed (game goes to Game-Over Mode).
1	CPU Board lockup; also, check Memory Protect circuit and U25 CMOS RAM for 'stuck' bits.
2	U27 Game ROM 1 faulty. (lower ROM, CPU Bd.)
3	U26 Game ROM 2 faulty. (upper ROM, CPU Bd.)
4	Unused (see "Other or No Indications")
5	Blanking signal 'stuck'; coin door closed; Memory Protect circuit faulty; or U25 CMOS RAM faulty.
Other or No Indications [2]	System Failure: Check 5 VDC Power Supply; U26 Game ROM 2 faulty.

Notes:
1. Zero (0) displayed during Memory Chip Test (using CPU Board switch SW2) indicates that Blanking Circuit is NOT functioning.
2. Eight (8) displayed during Memory Chip Test indicates that Blanking Circuit is functioning properly.

SYSTEM-11 SOUND SECTION TEST.

Press the Sound Diagnostic Switch (SW 1) on the CPU Board. Listen for the sound. The sound repeats, until the operator switches the *GRAND LIZARD* game Off and On.

NO SOUND DURING THIS TEST (but sound can be heard during the Diagnostic Tests).
Check the sound-select inputs (pins 2 through 9 of U9) to see if they pulse during Sound Test 01. Also, check the -12 V supply voltage on the CPU Board. If this voltage is low (or AC ripple seems too high), perform the following checks:

1. The gray and gray-green transformer secondary wires for 19.4 VAC.
2. The CPU Board filter capacitor C26 for -12 VDC.
3. The filter capacitor C26 for excessive AC ripple (over 0.75VAC).

If the previous checks did not isolate the problem, turn the Volume Control for maximum output. Momentarily touch a powered-up AC soldering pencil on the center tap of the Volume Control.

CAUTION

DO NOT use a soldering iron over 40 watts. Note also that cordless soldering irons will NOT work for this test.

Hearing a low hum indicates that the power amplifier (U1, TDA2002), the Volume Control, and the speaker are operating satisfactorily. Not hearing a hum requires repeating the test with the Volume Control turned part way down, to determine whether the Volume Control is faulty.

MAINTENANCE INFORMATION. Figure 2 shows the two main lubrication points of the Ball Trough Feeder (also the Multi-Ball Ejector, which utilizes the same mechanism). The shaded arrows show the directions in which the Ball Trough Feeder and other parts of its related assemblies can be adjusted for proper operation.

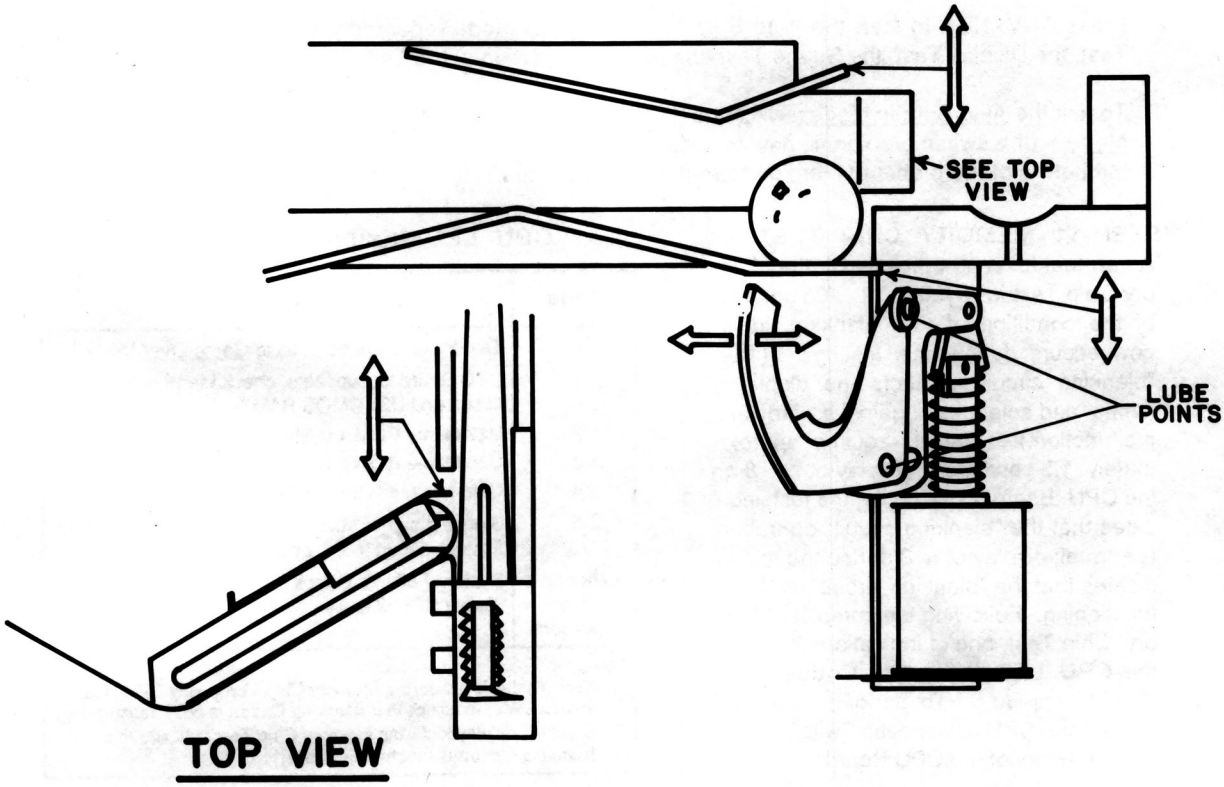

Figure 2. Adjustments and Lubrication Points, Ball Trough Feeder.

Section 2
Game Parts Information

- **Parts Lists and Diagrams:**

  Displays
  A/N Master Display Board (C-10877)
  CPU Board (D-10881-523)
  Background Sound Board (C-11030)
  Power Supply Board (D-8345-523)
  Backbox
  Lizard Head & Associated Parts
  Playfield Mylars
  Miscellaneous Game Parts
  Flipper Assemblies
  Standup Targets
  Magna-Save™ Magnet
  4-Bank Drop Target
  3-Bank Drop Target
  Multi-Ball™ Ejector
  Playfield Pivot Parts
  Playfield Parts
  Switches
  Lamps
  Solenoids & Rubber Parts

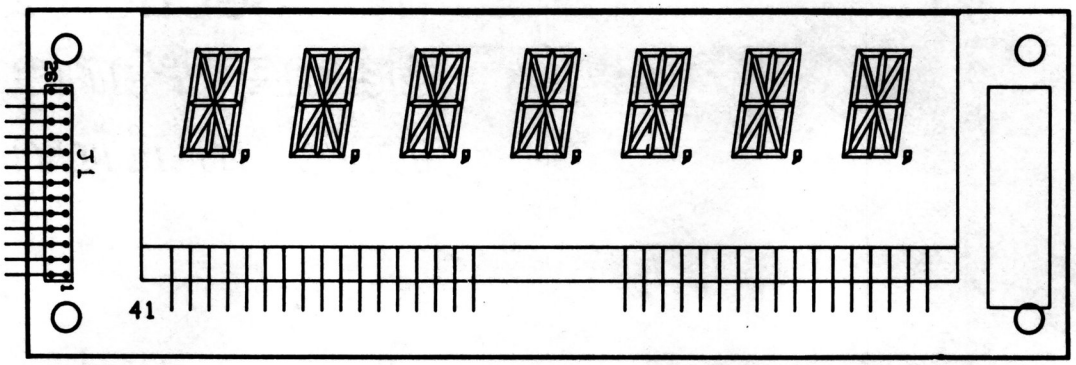

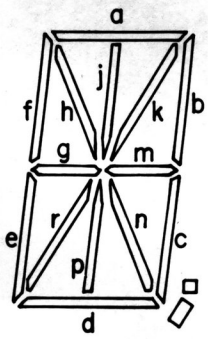

C-10866 Player Score Display Panel (Alphanumeric)

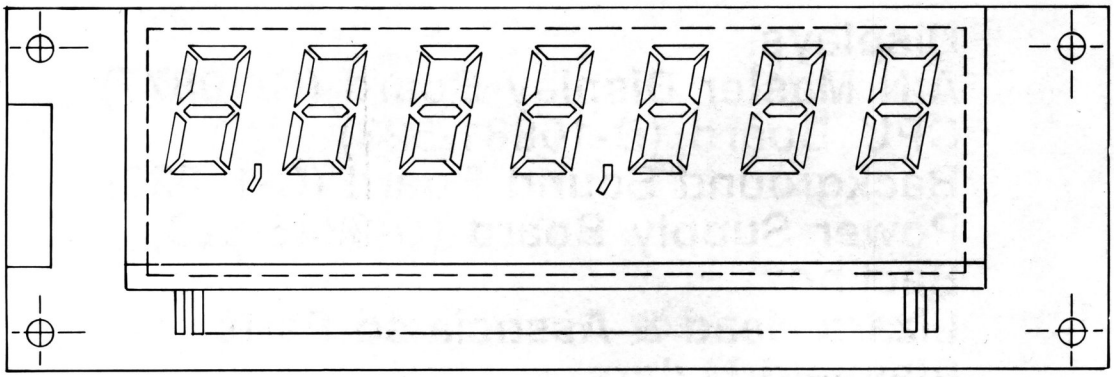

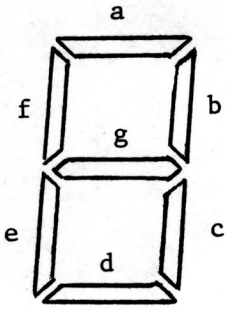

C-8364 Player Score Display Panel (7-Segment)

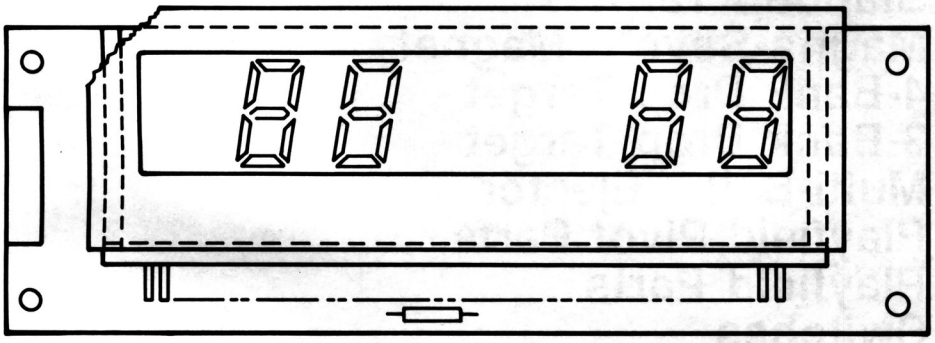

C-8365 BALL-IN-PLAY/MATCH Display Panel

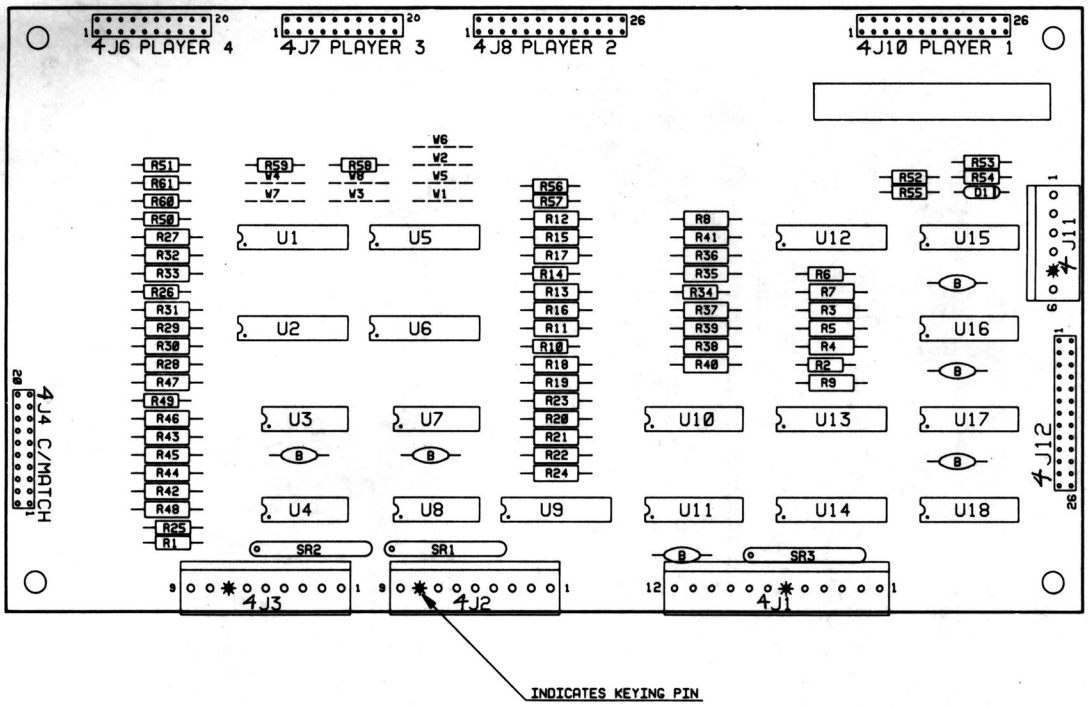

Alphanumeric Master Display Board

p/n C-10877

Item	Part No.	Ckt Designation	Description
1	5760-10875-00		Bare P. C. Board
2	5791-10850-00	J8, J10, J12	Connector, 26 pin (Hdr)
3	5791-09437-00	J4, J6, J7	Connector, 20 pin (Hdr)
4	5791-10862-12	J1	Connector, 12 pin (Hdr)
5	5791-10862-09	J2, J3	Connector, 9 pin (Hdr)
6	5791-10862-06	J11	Connector, 6 pin (Hdr)
7	5010-10258-00	R25, R26, R50 - R61	Resistor, 1 M, 1/4 w, 5%
8	5010-09774-00	R1, R2, R6, R10, R14, R34, R35	Resistor, 18 K, 1/4 w, 5%
9	5010-08772-00	R49	Resistor, 15 K, 1/4 w, 5%
10	5010-08981-00	R18 - R24, R27 - R33, R36, R37, R39, R40, R42 - R48	Resistor, 10 K, 1/4 w, 5%
11	5010-09534-00	W1 - W8	Resistor, 0 Ω
12	5019-10387-00	SR1 - SR3	SIP, 18 K, 9R, 10P, 5%
13	5043-08980-00	B	Capacitor, 0.01 mfd, 50V
14	5075-09135-00	D1	Zener, 1N4740A, 10V, 1 w
15	5310-09153-00	U10, U11, U15 - U18	IC, Hex Buffer, 4050
16	5310-09882-00	U3, U4, U7, U8	IC, Quad NOR, 4001B
17	5680-08969-00	U9, U12 - U14	IC, Cathode Seg. Driver, UDN7180A
18	5680-08968-00	U1, U2, U5, U6	IC, Anode/Digit Driver, UDN6118A or 6184
19	16-8850-139		Label, P. C. Board Ident.
20	5010-10927-00	R3 - R5, R7 - R9, R11 - R13, R15 - R17, R38, R41	Resistor, 8.2 K, 1/2 w,5%

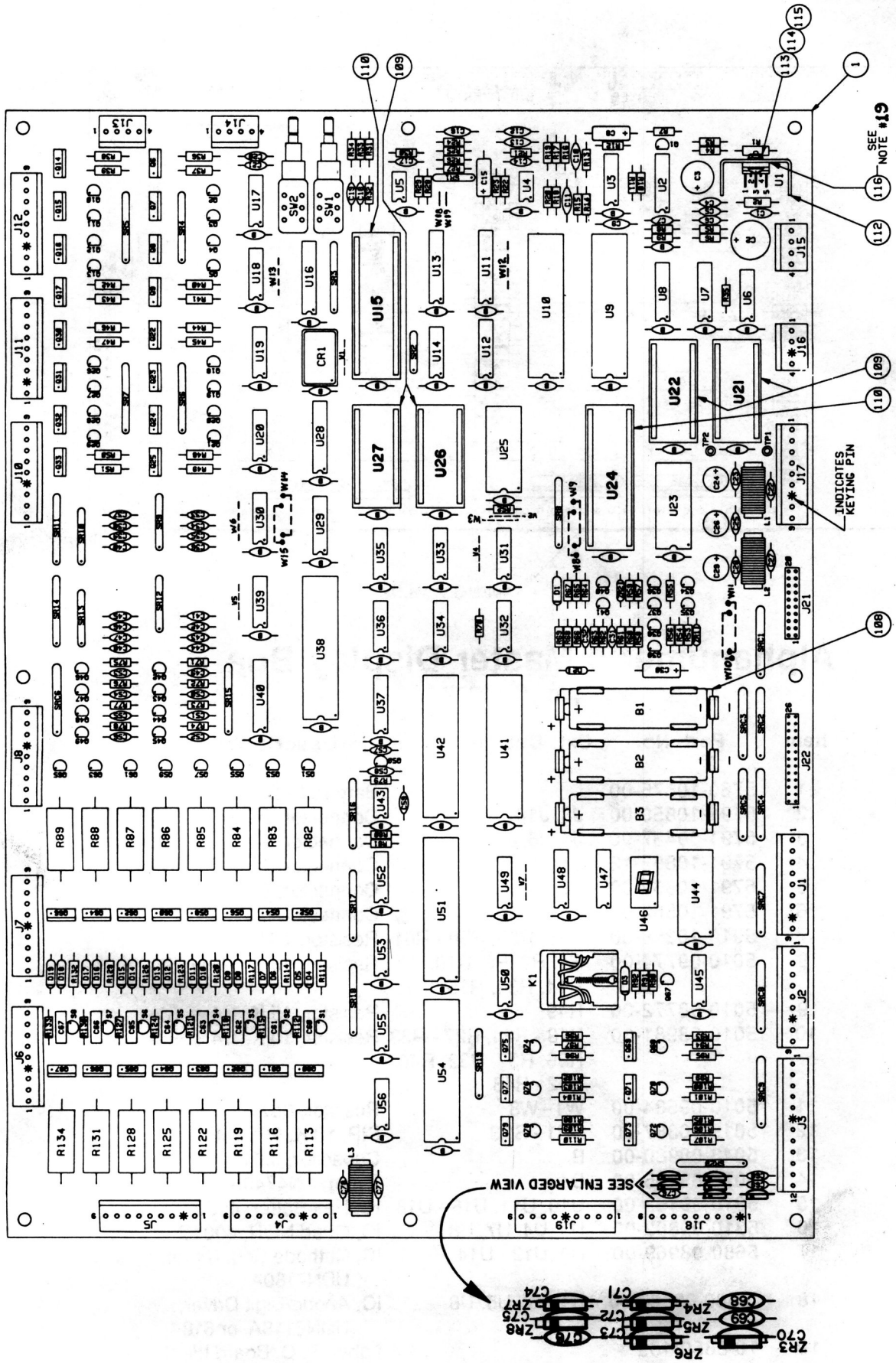

System 11 CPU Board (D-10881) Parts Information

GRAND LIZARD 32

System 11 CPU Board (D-10881) Parts Information

GRAND LIZARD 33

NOTES:

1. FOR SCHEMATIC, REFER TO DWG. #16-8947.
2. FOR ITEMS #56 AND #58 RESISTORS MUST BE MOUNTED 1/8" ABOVE SURFACE OF PCB.
3. I.C., 6820/6821, PIA: U9, U10, U38, U41, U42, U51, U54.
4. TRANSISTOR, 2N6427: Q51, Q53, Q55, Q57, Q59, Q61, Q63, Q65.
5. TRANSISTOR, TIP42: Q52, Q54, Q56, Q58, Q60, Q62, Q64, Q66.
6. TRANSISTOR, TIP122: Q6 THRU Q9, Q14 THRU Q17, Q22 THRU Q25, Q30 THRU Q33, Q69, Q71, Q73, Q75, Q77, Q79, Q80 THRU Q87.
7. TRANSISTOR, 2N4401: Q2 THRU Q5, Q10 THRU Q13, Q18 THRU Q21, Q26 THRU Q29, Q34 THRU Q38, Q41, Q67, Q68, Q70, Q72, Q74, Q76, Q78.
8. JUMPER, STANDARD: W1, W2, W4, W5, W7, W8, W11, W14, W16.
9. RESISTOR, 4.7K OHM: R31, R32, R35, R52, R55, R68, R92, R135.
10. RESISTOR, 1.0K OHM: R5, R6, R54, R57, R58, R64, R66, R112, R115, R118, R121, R124, R127, R130, R133.
11. RESISTOR, 10K OHM: R11 THRU R14, R25, R26, R53, R60, R65, R90.
12. RESISTOR, 2.7K OHM: R23, R24, R91, R93, R96, R99, R102, R105, R108.
13. RESISTOR, .4 OHM 3 WATT: R113, R116, R119, R122, R125, R128, R131, R134.
14. RESISTOR, 68 OHM 1/2 WATT: R36 THRU R51, R95, R98, R101, R104, R107, R110.
15. RESISTOR, 1.2K OHM: R111, R114, R117, R120, R123, R126, R129, R132.
16. SIP, 4.7K OHM & 470 PFD.: SRC1 THRU SRC5, SRC7, SRC8, SRC9.
17. CAPACITOR, .01 MFD.: BYPASS (B) 55 CAPACITORS, C14, C17 THRU C21, C31, C32, C39, C49 THRU C56.
18. CAPACITOR, 470 PFD.: C33 THRU C40, C68, C69, C76.
19. USE THERMAL COMPOUND BETWEEN ITEM #24 (U1) AND ITEM #112.
20. CONNECTOR, 9-PIN: 1J1, 1J2, 1J4 THRU 1J8, 1J10, 1J11, 1J12, 1J17, 1J18, 1J19.

ITEM	PART NO.	PART DESIGNATION	DESCRIPTION	QTY.
123	5791-09437-00	1J21	20-PIN RIBBON HEADER	1
122	5791-10050-00	1J22	26-PIN RIBBON HEADER	1
121	5075-09406-00	ZR3 THRU ZR8	ZENER DIODE 6.2V .5W	6
120	5791-10862-12	1J3	HEADER, 12H STR. SQ. PIN, .156	1
119	5791-10862-04	1J13 THRU 1J16	HEADER, 4H STR. SQ. PIN, .156	4
118	5791-10862-09	SEE NOTE #20	HEADER, 9H STR. SQ. PIN, .156	13
117	5580-00994-00	K1	RELAY, 4P, 40 OHM 6V	1
116	20-9229	SEE NOTE #19	THERMAL COMPOUND	.010 OZ.
115	4703-00007-00		#6 EXT. LOCKWASHER	1
114	4406-01117-00		6-32 HEX. NUT	1
113	4006-01003-06		6-32 X 3/8" P-PH-S	1
112	5705-09199-00		HEATSINK #6030	1
111	5824-09248-00	TP1, TP2	TEST POINT	2
110	5700-00905-00		40-PIN SOCKET	2
109	5700-10176-00		28-PIN SOCKET	4
108	5801-09021-00		BATTERY HOLDER #171	1
107	20-9491	W17, W18	BUS WIRE	1.5"
106	5900-09022-00	B1, B2, B3	BATTERY, ALKALINE, 1.5V (A-A)	3
105	5641-09312-00	SW1, SW2	SWITCH, P DPDT 100V, 5A.	2
	5641-09653-00		PUSH BUTTON SWITCH, SPST	0
104	5551-09802-00	L1, L2, L3	INDUCTOR, 4.7 uH 3A	3
103	5046-09348-00	C13	CAPACITOR, POLYSTYRENE, 4700 PFD. 5% 50 VOLT	1
102	5046-09346-00	C12	CAPACITOR, POLYSTYRENE, 1200 PFD. 5% 50 VOLT	1
101	5046-09350-00	C11	CAPACITOR, POLYSTYRENE, 180 PFD. 5% 100 VOLT	1
100	5046-09347-00	C10	CAPACITOR, POLYSTYRENE, 1800 PFD. 5% 50 VOLT	1
99	5043-09030-00	C16, C57	CAPACITOR, AXIAL, .047 MFD. 50V +/-20%	2
98	5041-09031-00	C9, C58	CAP., TANT., AXIAL, 1 MFD. 25V +/-20%	2
97	5040-09545-00	C30	CAP., ELECT., AXIAL, 22 MFD. 10V +50-10%	1
96	5043-09065-00	SEE NOTE #18	CAPACITOR, AXIAL, 470 PFD. 50V +/-20%	11
95	5045-09796-00	C60 THRU C67	CAP. POLYCARBONATE RAD. .1 MFD. 100V +/-10%	8
94	5040-09776-00	C2	CAP., ELECT., RADIAL, 470 MFD. 16V +50-10%	1
(B) 93	5040-10974-00	C3, C24, C26, C29	CAP., ELECT., RADIAL, 100 MFD. 35V +50-10%	4
92	5043-09844-00	C7, C41 THRU C48	CAPACITOR, AXIAL, 47 PFD. 50V +/-20%	9
91	5040-09343-00	C8, C15	CAP., ELECT., AXL., LOW L. 10 MFD. 20V +/-20%	2
90	5043-08996-00	C1, C4, C5, C10 THRU C13, C37, C38	CAPACITOR, AXIAL, .1 MFD. 50V +/-20%	11
89	5043-09845-00	C6, C22, C23, C25, C27, C28	CAPACITOR, AXIAL, 1K PFD. 50V +/-20%	6
(A) 88	5043-08980-00	SEE NOTE #17	CAPACITOR, AXIAL, .01 MFD. 50V +80-20%	71
87	5060-10324-00	SRC6	SIP, 8R 8C 10-PIN, 1K OHM & .001 MFD.	1
86	5060-10396-00	SEE NOTE #16	SIP, 8R 8C 10-PIN, 4.7K OHM & 470 PFD.	8
85	5019-09792-00	SR5, SR7	SIP, 9R 10-PIN, 2.7K OHM .125 W/R 5%	2
84	5019-09786-00	SR1, SR2	SIP, 5R 6-PIN, 4.7K OHM .125 W/R 5%	2
83	5019-09780-00	SR9, SR10, SR12, SR13	SIP, 4R 8-PIN, 1K OHM 5%	4
82	5019-09669-00	SR8	SIP, 9R 10-PIN, 1.0K OHM .125 W/R 5%	1
81	5019-10472-00	SR14	SIP, 9R 10-PIN, 3.3K OHM .125 W/R 5%	1
80	5019-09785-00	SR16	SIP, 9R 10-PIN, 2.2K OHM 1/4 WATT 5%	1
79	5019-09800-00	SR4, SR6, SR11	SIP, 9R 10-PIN, 560 OHM .125 W/R 5%	3
78	5019-09362-00	SR3, SR15, SR17, SR19, SR20	SIP, 9R 10-PIN, 4.7K OHM .125 W/R 5%	5
77	5019-09783-00	SR18	SIP, 9R 10-PIN, 6.8K OHM .125 W/R 5%	1
76	5010-09356-00	R27, R28	RESISTOR, C.F., 820 OHM 5% 1/4 WATT	2
75	5010-08772-00	R21	RESISTOR, C.F., 15K OHM 5% 1/4 WATT	1
74	5010-09324-00	R19, R20, R22, R29, R30	RESISTOR, C.F., 27K OHM 5% 1/4 WATT	5
73	5010-09333-00	R18	RESISTOR, C.F., 180K OHM 5% 1/4 WATT	1
72	5010-08846-00	R17	RESISTOR, C.F., 220K OHM 5% 1/4 WATT	1
71	5010-09342-00	R16	RESISTOR, C.F., 36K OHM 5% 1/4 WATT	1
70	5010-08824-00	R15	RESISTOR, C.F., 43K OHM 5% 1/4 WATT	1
69	5010-10631-00	SEE NOTE #15	RESISTOR, C.F., 1.2K OHM 5% 1/2 WATT	8
68	5010-09085-00	R71 THRU R78	RESISTOR, C.F., 1.5K OHM 5% 1/4 WATT	8
67	5010-09179-00	R9	RESISTOR, C.F., 3.3M OHM 5% 1/4 WATT	1
66	5010-09416-00	R33, R34	RESISTOR, C.F., 470 OHM 5% 1/4 WATT	2
(C) 65	5010-09160-00	R59, R61, W13, W15	RESISTOR, C.F., 220 OHM 5% 1/4 WATT	4
64	5010-10170-00	R69	RESISTOR, C.F., 47 OHM 5% 1/4 WATT	1
63	5010-10171-00	R67	RESISTOR, C.F., 56 OHM 5% 1/4 WATT	1
62	5010-10003-00	R62, R63	RESISTOR, C.F., 390 OHM 5% 1/4 WATT	2
61	5010-09161-00	R4	RESISTOR, C.F., 2.2 OHM 5% 1/4 WATT	1
60	5010-09181-00	R2	RESISTOR, C.F., 1.0 OHM 5% 1/2 WATT	1
59	5010-09361-00	R1	RESISTOR, C.F., 220 OHM 5% 1/2 WATT	1
(A) 58	5012-10860-00	R82 THRU R89 SEE NOTE #2	RESISTOR, C.F., 27 OHM 5% 2 WATT	8
57	5010-08993-00	SEE NOTE #14	RESISTOR, C.F., 68 OHM 5% 1/2 WATT	22
56	5012-09037-00	SEE NOTES #2 AND #13	RESISTOR, WIREWOUND .4 OHM 5% 3 WATT	8
55	5010-08997-00	SEE NOTE #12	RESISTOR, C.F., 2.7K OHM 5% 1/4 WATT	9
54	5010-09363-00	R3	RESISTOR, C.F., 5.6K OHM 5% 1/4 WATT	1
53	5010-09086-00	R81	RESISTOR, C.F., 6.8K OHM 5% 1/4 WATT	1
52	5010-09034-00	SEE NOTE #11	RESISTOR, C.F., 10K OHM 5% 1/4 WATT	10
51	5010-08983-00	R7, R8, R10, R70, R80	RESISTOR, C.F., 3.3K OHM 5% 1/4 WATT	5
50	5010-09113-00	R79	RESISTOR, C.F., 33K OHM 5% 1/4 WATT	1
49	5010-09358-00	SEE NOTE #10	RESISTOR, C.F., 1.0K OHM 5% 1/4 WATT	15
(C) 48	5010-08991-00	SEE NOTE #9	RESISTOR, C.F., 4.7K OHM 5% 1/4 WATT	8
(C) 47	5010-09534-00	SEE NOTE #8	RESISTOR, C.F., 0 OHM 1/4 WATT	9
46	5010-09039-00	R56	RESISTOR, C.F., 10 OHM 5% 1/4 WATT	1
45	5010-08992-00	R94, R97, R100, R103, R106, R109	RESISTOR, C.F., 560 OHM 5% 1/4 WATT	6
44	5075-09059-00	ZR2	ZENER DIODE, 1N5990 3.9V .5W	1
43	5075-09010-00	ZR1	ZENER DIODE, 1N5996A 6.8V .5W	1
42	5070-09266-00	D1	SILICON DIODE, 1N5817 1.0 A.	1
41	5070-08919-00	D2	SILICON DIODE, 1N4148 150 mA.	1
40	5070-06258-00	D3 THRU D19	DIODE, 1N4001	17
39	5130-09014-00	S1 THRU S8	SILICON CONTROL RECT., 2N5060 .8A 30V	8
38	5100-09016-00	Q39, Q50	TRANSISTOR, TO-92, 2N4403, PNP	2
37	5160-10269-00	Q1, Q40, Q42 THRU Q49	TRANSISTOR, TO-92, 2N3904, NPN	10
36	5160-08930-00	SEE NOTE #7	TRANSISTOR, TO-92, 2N4401, NPN	29
35	5162-09410-00	SEE NOTE #6	TRANSISTOR, TO-220, TIP122, NPN	30
34	5191-08978-00	SEE NOTE #5	TRANSISTOR, TO-220, TIP42, PNP	8
33	5162-08976-00	SEE NOTE #4	TRANSISTOR, TO-92, 2N6427 NPN DARLINGTON	8
32	5521-10506-00	CR1	OSCILLATOR, 4 MHZ.	1
31	5019-10501-00	U47	DIP, 8R 16-PIN, 270 OHM .125 W/R 5%	1
30	5200-09309-00	U49	I.C., 7407, HEX. BUFFERS/OPEN-COLLECTOR	1
29	5200-08948-00	U45, U50	I.C., 7402, QUAD 2-INPUT NOR	2
28	5310-09155-00	U30, U39	I.C., MC14011, QUAD 2-INPUT NAND	2
27	5200-08974-00	U55, U56	I.C., 7406, HEX. INVERTER OPEN C.	2
26	5200-08973-00	U17 THRU U20, U52, U53	I.C., 7408, QUAD 2-INPUT AND	6
25	5201-09867-00	U11, U13, U40	I.C., 74LS244, OCTAL BUFFER	3
24	5370-09156-00	U1	I.C., TDA2002, AUDIO AMPLIFIER	1
23	5340-09878-00	U23	I.C., 2016, 2K X 8 STATIC RAM	1
22	5201-09745-00	U37	I.C., 74LS138, 3 TO 8 LINE DECODER	1
21	5371-09152-00	U2	I.C., MC1408, D/A CONVERTER	1
20	5201-09486-00	U28	I.C, 74LS374, OCTAL D-TYPE FLIP-FLOP	1
19	5201-10014-00	U33	I.C., 74LS20, DUAL 4-INPUT NAND	1
18	5201-09499-00	U31, U34	I.C., 74LS00, QUAD 2-INPUT NAND	2
17	5200-09013-00	U36	I.C., 7404, HEX. INVERTER	1
16	5201-09235-00	U35	I.C., 74LS10, TRIPLE 3-INPUT NAND	1
15	5201-09247-00	U14	I.C., 74LS02, QUAD 2-INPUT NOR	1
14	5201-09743-00	U32	I.C., 74LS08, QUAD 2-INPUT AND	1
13	5310-09236-00	U29	I.C., 4020, COUNTER 14 BIT CMOS	1
12	5431-09449-00	U43	I.C., MC1455, TIMER	1
11	5201-09487-00	U6	I.C., 74LS74, DUAL D-TYPE FLIP-FLOP	1
10	5671-09411-00	U46	I.C., MAN72A, 7 SEG. LED DISPLAY	1
9	5200-09407-00	U48	I.C., 7447, BCD TO 7 SEG. DECODER	1
8	5201-09246-00	U7, U8, U12	I.C., 74LS139, DUAL 2 TO 4 LINE DECODER	3
7	5200-09010-00	U44	I.C., 74154, 4 TO 16 DECODER	1
6	5340-10139-00	U25	I.C., 5517-2, 2K X 8 CMOS ST. RAM	1
5	5430-08972-00	SEE NOTE #3	I.C., 6820/6821, PIA	7
4	5201-09300-00	U16	I.C., 74LS245, OCTAL BUS TRANCEIVER	1
3	5370-09321-00	U4, U5	I.C., 1458, DUAL OP-AMP.	2
2	5370-09691-00	U3	I.C., 55536, CONTINUOUSLY VARIABLE SLOPE DELTA MOD.	1
1	5764-10881-00		BARE PC BOARD	1

BILL OF MATERIAL

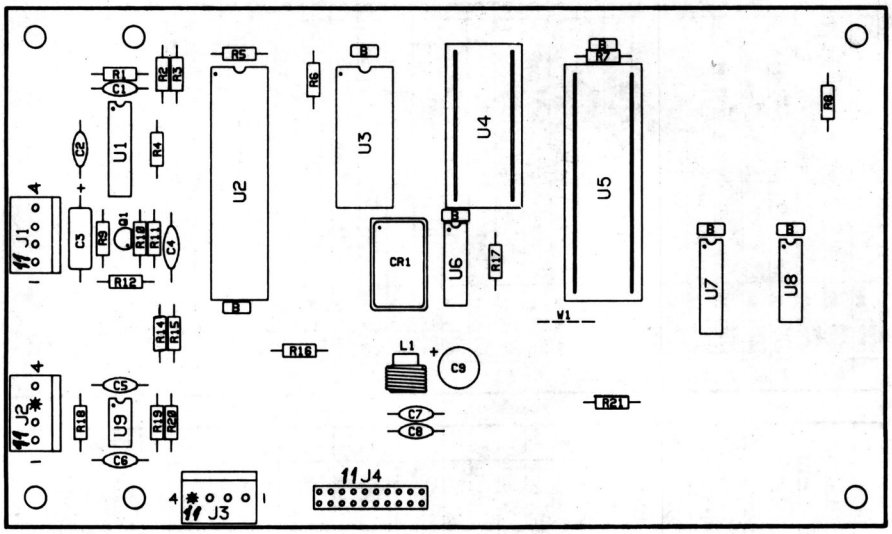

Background Sound Board

p/n C-11030

Item	Part No.	Ckt Designation	Description
1	5766-10929-00		Bare P. C. Board
2	5371-09152-00	U1	IC, D/A Convtr, MC1408
3	5430-10322-00	U2	IC, PIA, MC68B21
4	5340-09878-00	U3	IC, RAM, 2016
5	5281-09487-00	U6	IC,74LS74
6	5281-09745-00	U7	IC,74LS138
7	5281-09235-00	U8	IC,74LS10
8	5281-09321-00	U9	IC, Op Amp, MC1458
9	5160-10269-00	Q1	Transistor, 2N3904, NPN
10	5010-08983-00	R1, R4, R11	Resistor, 3.3K, 5%, 1/4w, Carbon Film
11	5010-08991-00	R2, R3, R5 - R8 R16, R17, R21	Resistor, 4.7K, 5%, 1/4w, Carbon Film
12	5010-08997-00	R12	Resistor, 2.7K, 5%, 1/4w, Carbon Film
13	5010-09179-00	R10	Resistor, 3.3M, 5%, 1/4w, Carbon Film
14	5010-09034-00	R14, R15	Resistor, 10K, 5%, 1/4w, Carbon Film
15	5010-09363-00	R18	Resistor, 5.6K, 5%, 1/4w, Carbon Film
16	5010-09324-00	R19, R20	Resistor, 27K, 5%, 1/4w, Carbon Film
17	5043-09844-00	C1	Capacitor, 47 pfd, ceramic, 50V, axial
18*	5043-08980-00	C2, C5, C6	Capacitor, .01 mfd, ceramic, 50V, axial
19	5043-09343-00	C3	Capacitor, 10 mfd, electr., 20V, axial
20	5043-09030-00	C4	Capacitor, .047 mfd, ceramic, 50V, axial
21	5043-09845-00	C7, C8	Capacitor, .001 mfd, ceramic, 50V, axial
22	5040-10974-00	C9	Capacitor, 100mfd, electr., 35V, axial
23	5551-10161-00	L1	Inductor, 2.0 µH, 3A
24	5791-10862-04	J1, J2, J3	Connector, 4 pin (Hdr)
25	5791-09437-00	J4	Connector, 20 pin, (Hdr) Ribbon Cable
26	5700-10176-00		IC Socket, 28 pin
a)	A-5343-523-4	U4	IC, B/G Sound ROM
27	5700-08985-00		IC Socket, 40 pin
a)	5400-10320-00	U5	IC, µProcessor, MC68B09E
28	5010-09534-00	W1, R9	Resistor, 0Ω, 1/4w, Carbon Film
29	5521-10931-00	CR1	Oscillator, 8 MHz

Note: Six capacitors provide +5VDC filtering for ICs; they are shown on diagram with "B" symbol.

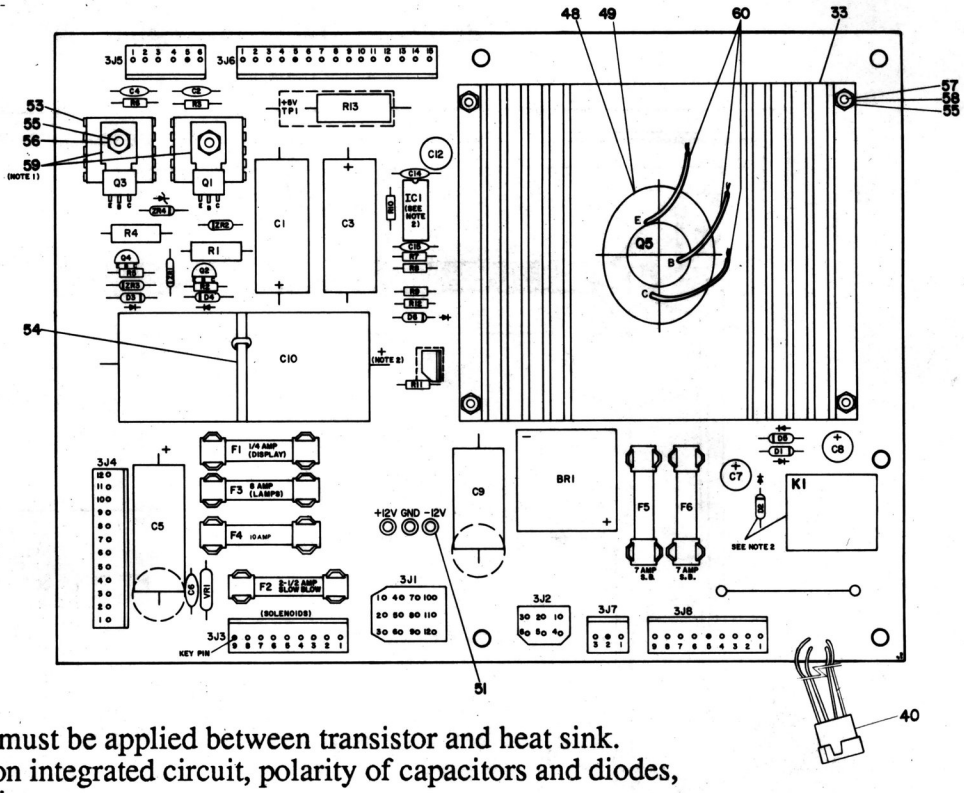

NOTES:

1. Heat sink compound must be applied between transistor and heat sink.
2. Observe index mark on integrated circuit, polarity of capacitors and diodes, and position of transistors.
3. The view of Q5 and its related heat sink and hardware is from the bottom of the heat sink, to clarify installation.

Power Supply
p/n D-8345-523

Item	Part No.	Ckt Designation	Description
1	5765-09466-01		Bare P. C. Board
2	5013-09426-00	R7	Resistor, 2.15K, 1%, 1/4w, Metal Film
3	5013-09427-00	R8	Resistor, 4.99K, 1%, 1/4w, Metal Film
4	5010-09428-00	R11	Resistor, 1.5K, 2%, 1/4w, C. Film
5	5010-09085-00	R10	Resistor, 1.5K, 5%,1/4w
6	5010-09541-00	R9	Resistor, 2.7K, 2%,1/4w
7	5010-09508-00	R12	Resistor, 270Ω, 2%, 1/4w, C. Film
8	5012-09429-00	R13	Resistor, 0.12Ω, 5%,5w
9	5010-09536-00	R1, R4	Resistor, 39K, 5%,1w
10	5010-09061-00	R2, R5	Resistor, 680Ω, 2w
11	5010-09069-00	R3, R6	Resistor, 330K, 5%,1/2w
12	5040-09419-00	C10	Capacitor, 18,000 mfd, electr, 20V, axial
13	5040-09420-00	C9	Capacitor, 1000 mfd, electr, 25V, axial or radial
14	5040-09423-00	C12	Capacitor, 330 mfd, electr, 10V,radial
15	5043-9065-00	C15	Capacitor, 470 pfd
16	5040-9053-00	C1, C3	Capacitor, 100 mfd, electr, 150V
17	5040-09070-00	C5	Capacitor, 100 mfd, electr, 100V, axial or radial
18	5043-09072-00	C2, C4	Capacitor, 0.1 mfd, 500V, disc
19	5043-09446-00	C14	Capacitor, 0.1 mfd, 50V, disc
20	5070-06258-00	D1, D2, D5, D6	Diode, 1N4001
21	5070-09054-00	D3, D4	Diode, 1N4004
22	[illegible]75-09059-00	ZR1, ZR3	Zener, 1N5990, 3.9v, 5%
23	[illegible]75-09060-00	ZR2, ZR4	Zener, 1N4764, 100v, 5%
24	[illegible]460-09424-00	IC1	IC, Volt. Reg., MC1723C
25	5043-09443-00	C6	Capacitor, 0.1 mfd, 200v, disc
26	5040-09421-00	C7	Capacitor, 100 mfd, 25v, radial
27	5040-09422-00	C8	Capacitor, 47 mfd, 50v, radial
28	5164-09057-00	Q1	Transistor, SDS201, NPN
29	5164-09056-00	Q4	Transistor, MPSD02, NPN
30	5194-09058-00	Q3	Transistor, SDS202, PNP
31	5194-09055-00	Q2	Transistor, MPSD52, PNP
32	5162-09425-00	Q5	Transistor, 2N6057, NPN
33	5705-09431-00		Heak Sink
34	5791-09074-00	3J6	Connector, 15 pin (Hdr)
35	5791-09027-00	3J3, 3J8	Connector, 9 pin (Hdr)
36	5791-09038-00	3J2	Connector, 6 pin (Hdr)
37	5791-09067-00	3J5	Connector, 6 pin (Hdr)
38	5791-09434-00	3J4	Connector, 12 pin (Hdr)
39	5791-09435-00	3J7	Connector, 3 pin (Hdr)
40	H-11065	3J9	Cable/Connector Assembly
a)	5791-09400-00		Connector shell
b)	5820-09080-00		Connector pin
41	5791-09068-00	3J1	Connector, 12 pin (Hdr)
42	5321-09178-00		Fuseholder
43	5731-09128-00	F2	Fuse, 2.5A, 250v, S-B
44	5731-09071-00	F3	Fuse, 8A, 32v
45	5730-06508-00	F4	Fuse, 10A, 32v
46	5731-08761-00	F1	Fuse, 1/4A, 250v, S-B
47	5017-09064-00	VR1	Varistor
48	5700-09445-00		Socket
49	5701-09652-00		Mica Insulator
50	5580-09555-00	K1	Relay, 24VDC, 10A, DPDT
51	5824-09428-00	TP1 - TP4	Terminal, #1502-1 (Test Post)
52	5100-09418-00	BR1	Bridge Rectifier, 35A, 100V
53	5705-09042-00		Heat Sink
54	03-7947		Tie Wrap
55	4005-01016-00		Mach. Screw, 5-40 x 7/16, RH
56	4700-00004-00		Flatwasher, 0.146 x 3/8, 21 Ga.
57	4701-00023-00		Lockwasher, #5, split
58	4405-01117-00		Hex Nut, 5-40
59	20-9229		Heat sink Thermal Compound
60	HW-30118-4		Lead wire, 18 AWG, 3"
61	5731-01003-00	F6, F5	Fuse, 7A, 250V, S-B

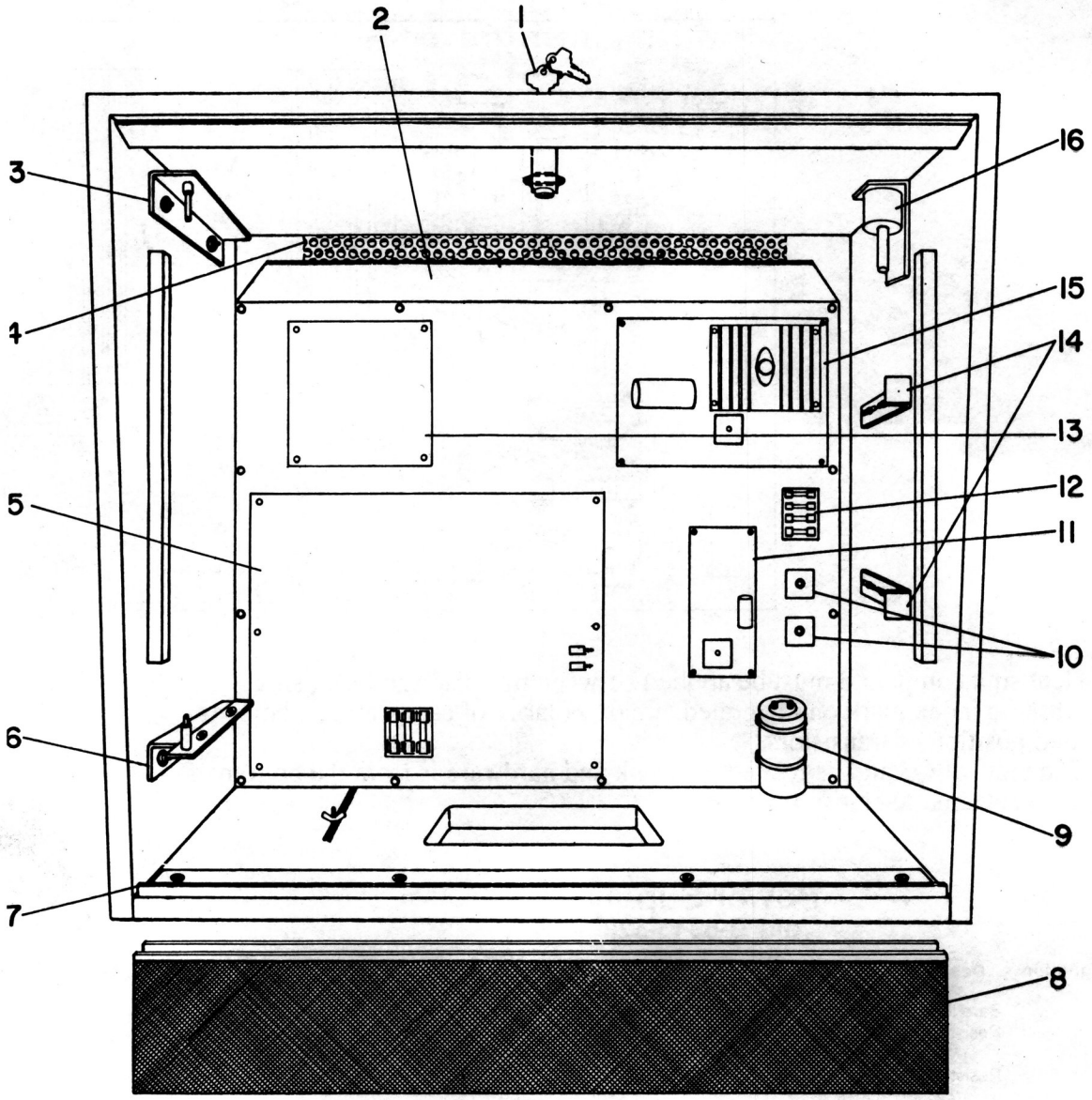

Backbox Parts Listing

Item	Part No.	Description
1	20-6542-TB	Cam Lock
2	D-11032	PCB Plate Assembly
3	A-7984	Upper Hinge Assembly
4	01-6645	Venting Screen
5	D-10881-523	System 11 CPU, Grand Lizard
6	A-10815	Lower Backbox Hinge Assembly
7	01-8083	Lower Speaker Bracket
8	C-10688	Speaker Panel Assembly
9	5040-09051-00	Capacitor, 30,000 µFd., 25V
10	5100-09418-00	Bridge Rectifier, 100v, 35A.
11	C-9939	Flipper Power Supply
12	5733-10702-04	Fuse Holder
13	C-11029-523	Background Sound Board, G. L.
14	01-8084	Insert Stop Bracket
15	D-8345-523	Power Supply Assembly, G. L.
16	B-10686	Knocker Assembly

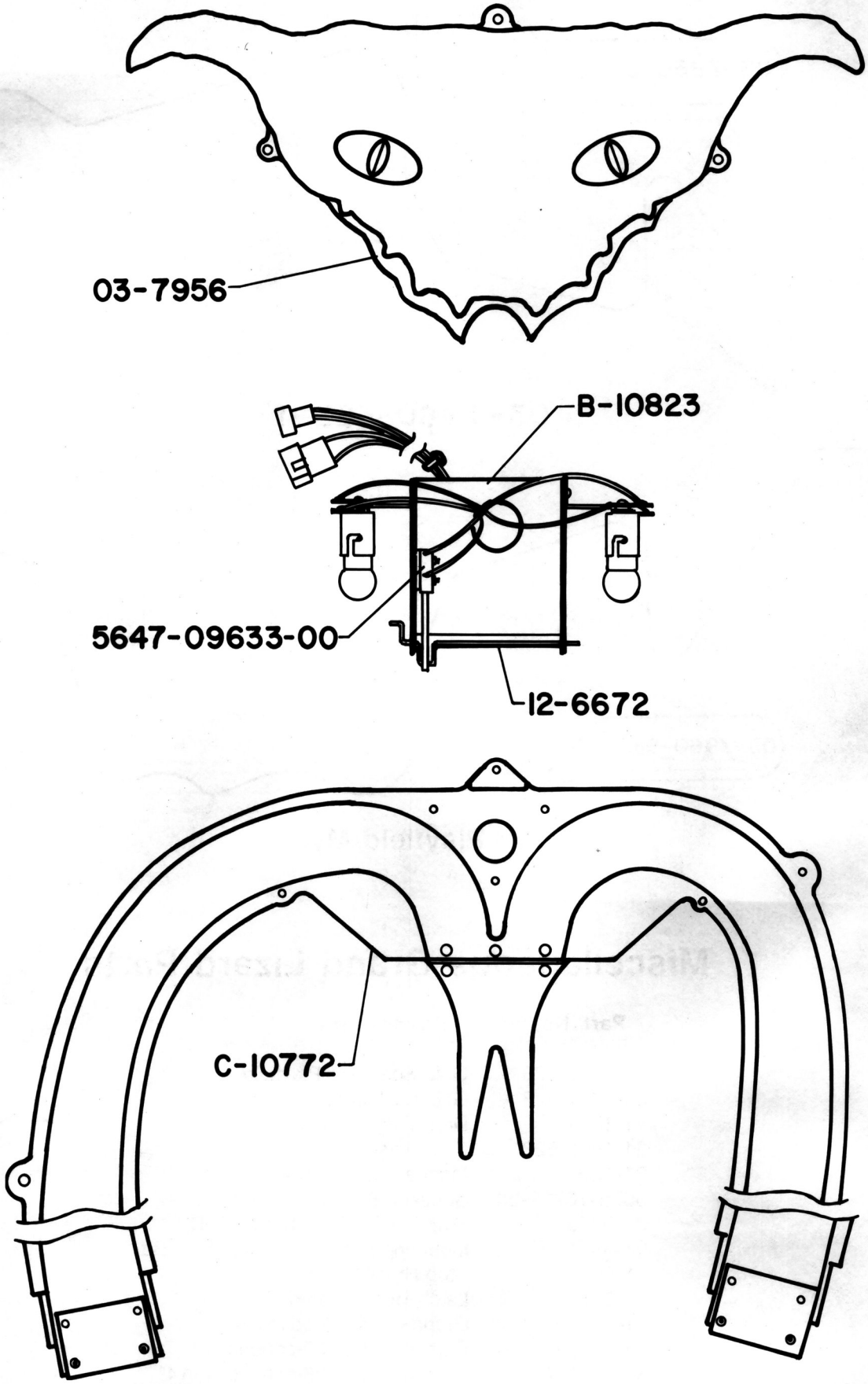

Lizard Head; L. Head Switch & Lamps Mounting; A & B Ramp

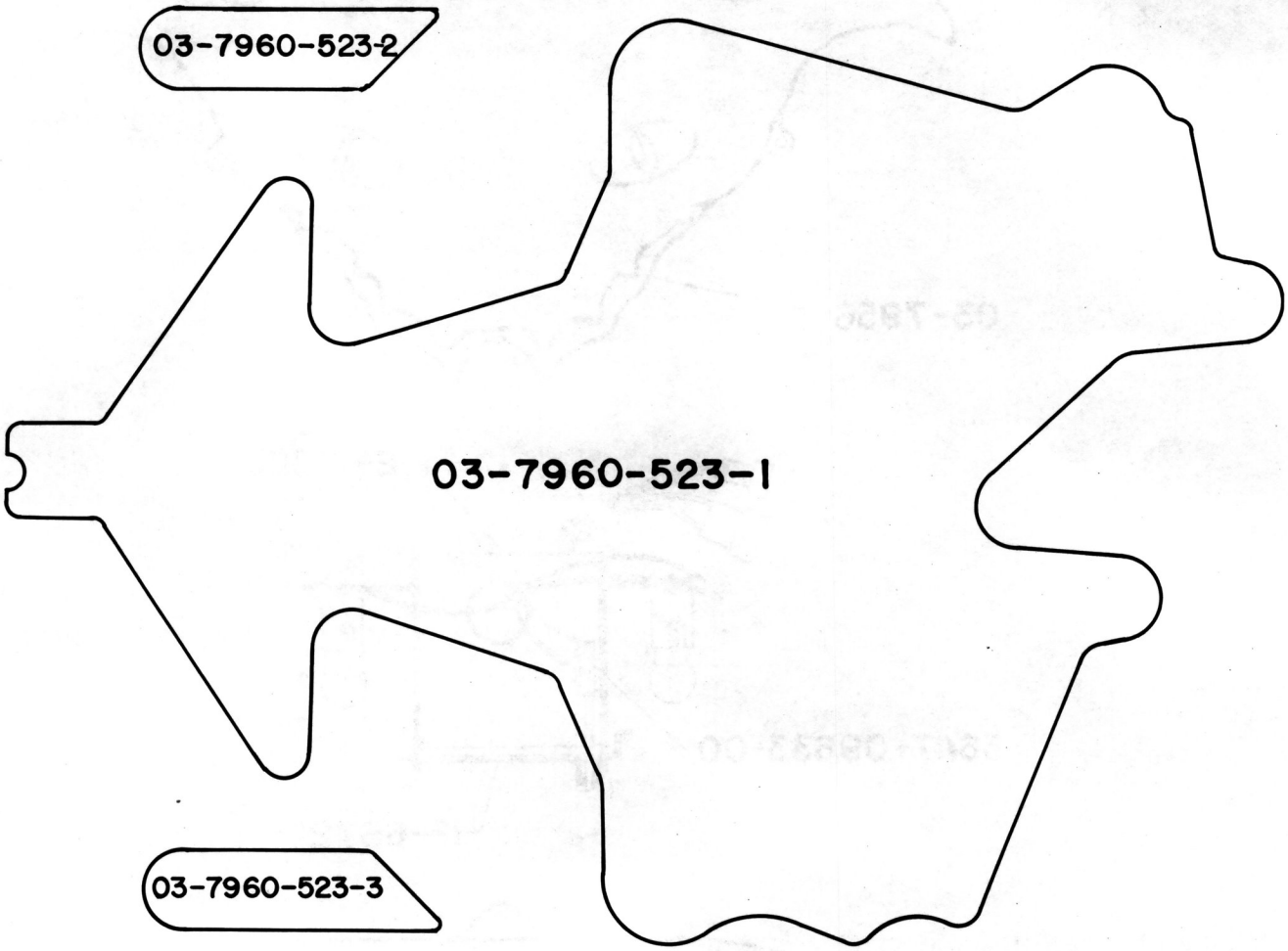

Playfield Mylars

Miscellaneous Grand Lizard Parts

Part No.	Description
31-1002-523	G. L. Screened Playfield
31-1357-523	G. L. Backglass
31-1371	Drop Target Decal
31-1006-523	G. L. Plastics Set
31-1399	Magna-Save™ Decal
5555-10799-00	Speaker, 8Ω, 30w, 4 x 10
20-9269	Standoff, 1/2", P-nut (on PCB)
01-6571	Mounting Bracket, Hinge, Insert Bd.
01-6652	Stop Bracket
01-6655	Latch - Insert Board
11-523-IN	Grand Lizard Wood Insert
5795-09453-00	Ribbon Cable, 20-conductor
5795-10868-14	Ribbon Cable, 26-conductor, 14"
5795-10938-22	Ribbon Cable, 26-conductor, 22"
5795-09941-00	Ribbon Cable, 20-conductor, 18"

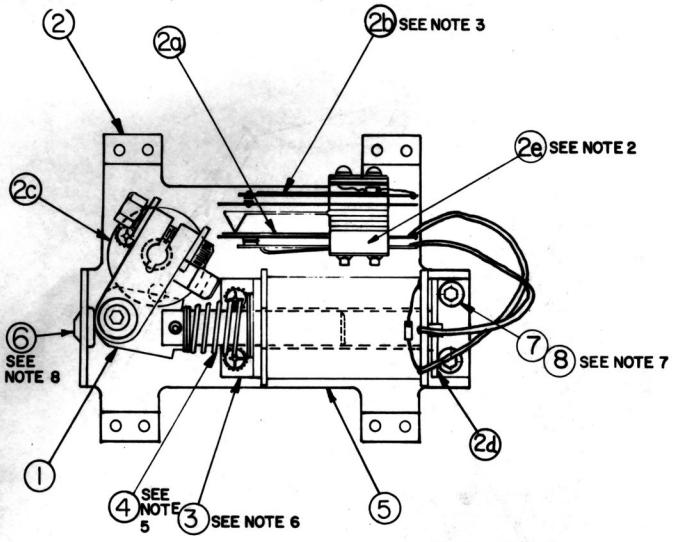

C-9952-R Flipper

ITEM	PART NO.	DESCRIPTION
1	B-10655-R	Crank Link Assembly
2	C-9954-R	Flipper Base/Lane Change Assembly
2a	03-7811	End of Stroke (EOS) Switch
2b	SW-1A-150	Lane Change Switch
2c	03-7568	Flipper Bushing
2d	A-10280	Flipper Stock Bracket Assembly
3	01-7695	Solenoid Bracket
4	10-376	Coil Plunger Spring
5	FL 23/600-30/2600	Flipper Coil
6	23-6577	Bumper Plug

NOTES:

1 Each Flipper Assembly is mounted below the playfield, in conjunction with the plastic flipper and shaft (20-9250) and flipper rubber (23-6519) (on the upper side of the playfield).
2 The tip of the EOS Switch must travel .015 (+.010, −.000 inch), before the contacts fully open with the flipper in the actuated position. The EOS Switch contacts must have a gap of .062 (±.015) inch. Any adjustment of the EOS Switch must be made at a minimum distance of .25 inch from the switch body
3 The Lane Change Switch must have a gap of .046 (±.015) inch, when fully open
4 All moving elements of the assembly must operate freely without any evidence of binding
5 Coil plunger spring must fit within the four lugs of the solenoid bracket
6 For coil replacement, remove solenoid bracket (item 3) to prevent screw damage
7 Use Loctite when reassembling flipper stop bracket screws.
8 When using bumper plug on older flipper assemblies, readjust flipper position.
9 Solid color grey (or blue) wire connects to the banded end of the diode, mounted on the connector end of flipper coil (item 5). Wire with trace color connects to the unbanded end of the diode.

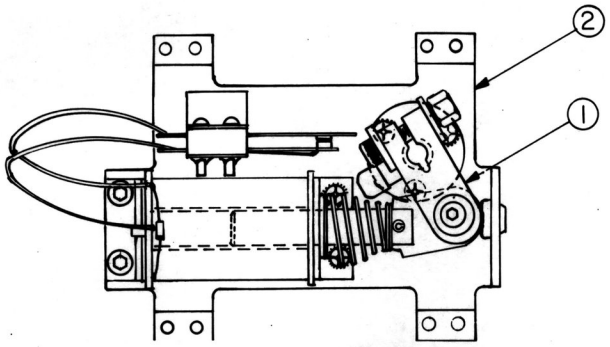

C-9953-L Flipper, Unique Parts

ITEM	PART NO.	DESCRIPTION
1	B-10655-L	Crank Link Assembly, Left
2	C-9957-L	Flipper Sub Base Assembly

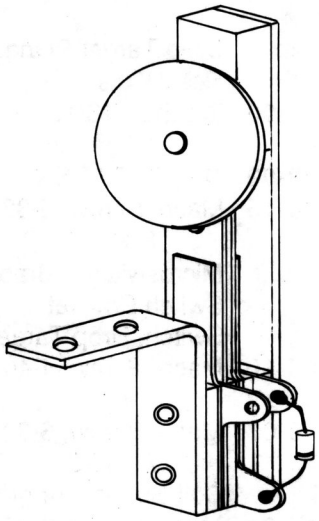

A-9268

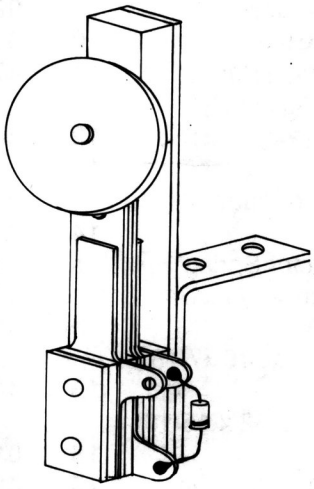

A-9270

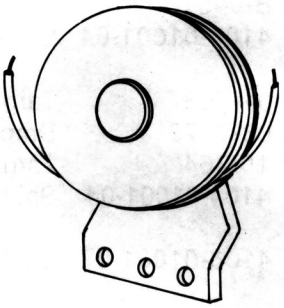

A-8447

Grand Lizard Standup Targets & Magna-Save™

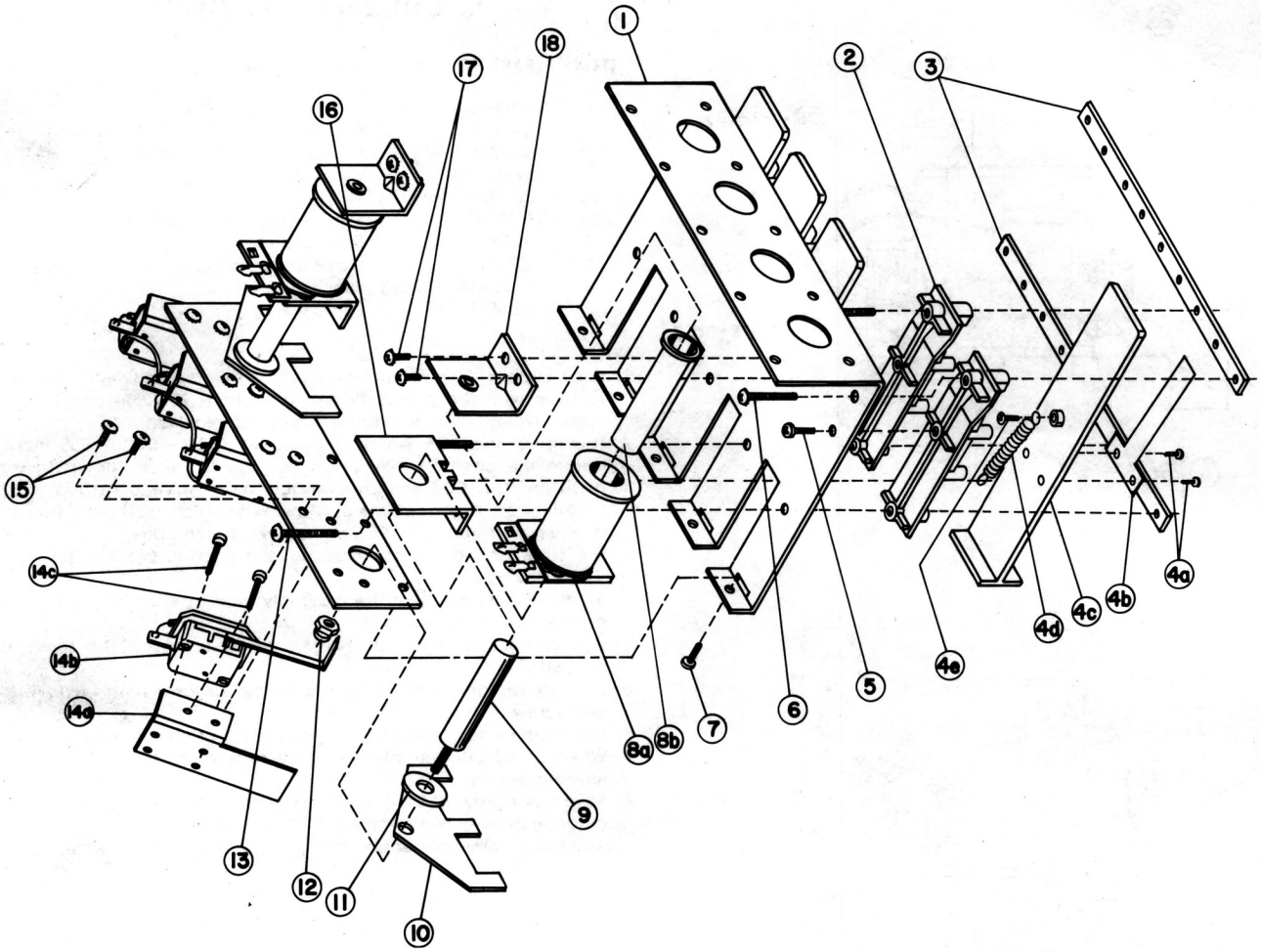

4-Bank Drop Target Assembly

p/n D-10883

Item	Part No.	Description	Item	Part No.	Description
1	01-7205	Drop Target Frame	9	02-3972	Drop Target Plunger
2	03-7479	Drop Target Guide	10	01-7036	Reset Plate
3	01-6450-4	Target Retaining Bar	11	4700-00023-00	Washer, 13/16 o.d. x 5/8 i.d 16 ga.
4	B-8451	Drop Target Assembly			
a)	4104-01001-04	Sh. Metal Screw, #4 x1/4, P-PH-A	12	4410-01132-00	Nut, 10-32 ESN
			13	4006-01003-15	Mach. Screw, 6-32 x 15/16, P-RH-S
b)	01-7037	Target Backup Blade			
c)	03-7478	Drop Target	14	A-9417	Microswitch & Bracket
d)	10-364	Target Retractor Spring	a)	01-7495	Switch Bracket
e)	4104-01001-04	Sh. Metal Screw, #4 x1/4, P-PH-A	b)	17-1042	Switch, Drop Target
			c)	4004-01003-10	Mach. Screw, 4-40 x 5/8, P-PH-S
5	4106-01001-07	Sh. Metal Screw, #6 x7/16, P-PH-A	15	4006-01003-03	Mach. Screw, 6-32 x 3/16, P-PH-S
6	4006-01003-15	Mach. Screw, 6-32 x 15/16, P-PH-S	16	01-6451-4	Coil Support Angle
7	4006-01017-04	Mach. Screw, 6-32 x 1/4, P-RH-S	17	4006-01017-04	Mach. Screw, 6-32 x 1/4, P-RH-S
8a	AE-23-800-04	Coil Assembly	18	A-8037	Coil Stop Assembly
b)	03-7066-4	Coil Sleeve			

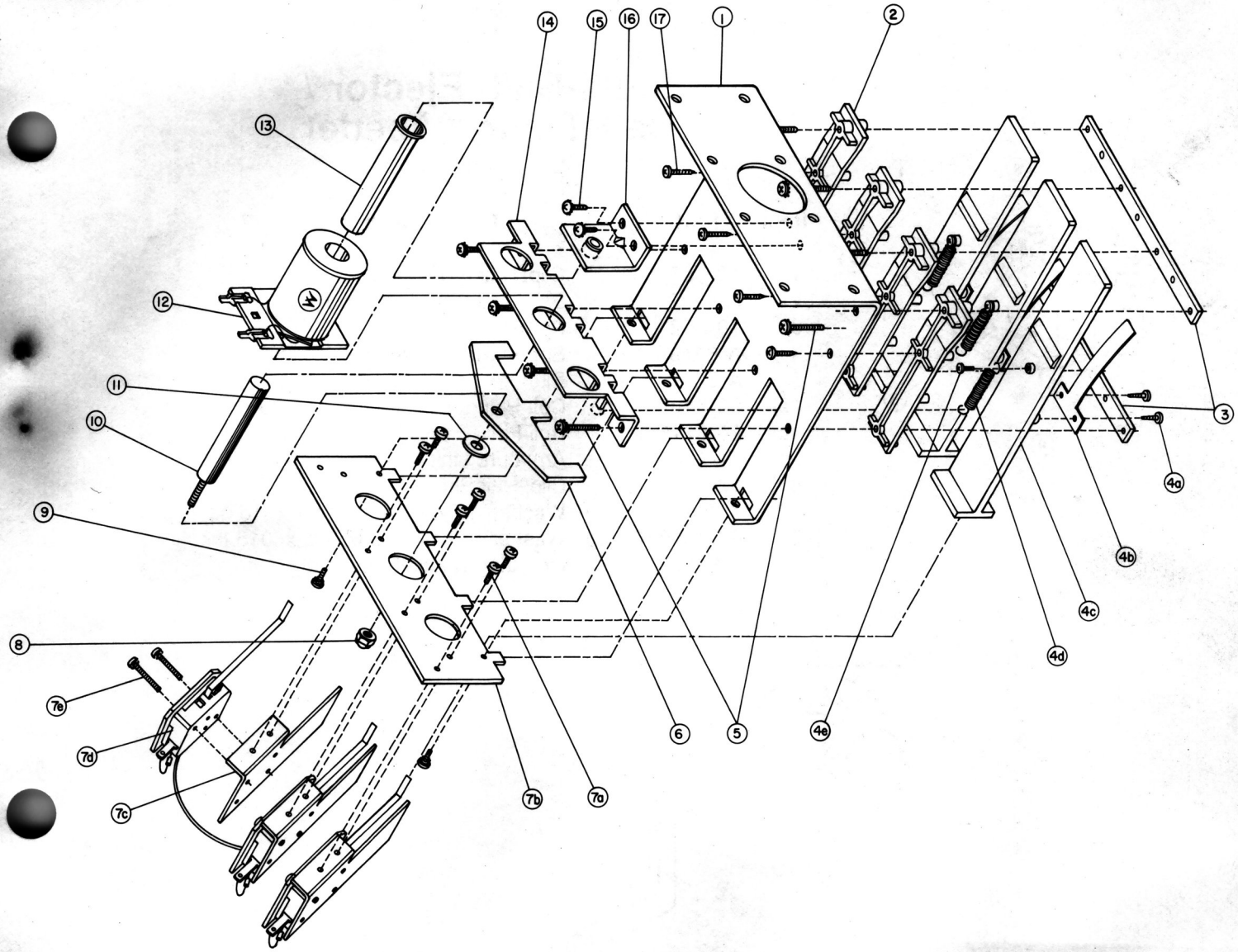

3-Bank Drop Target Assembly

p/n D-9355

Item	Part No.	Description
1	01-7567	Drop Target Frame
2	03-7479	Drop Target Guide
3	01-6450-3	Target Retaining Bar
4	B-8451	Drop Target Assembly
a)	4104-01001-04	Sheet Metal Screw, #4 x 1/4, P-PH-A
b)	01-7037	Target Backup Blade
c)	03-7478	Drop Target
d)	10-364	Target Retractor Spring
e)	4104-01001-04	Sheet Metal Screw, #4 x 1/4, P-PH-A
5	4006-01003-15	Mach. Screw, 6-32 x 15/16, P-PH-S
6	01-7036	Reset Plate
7	B-9354	Switch & Bracket Assembly
a)	4006-01003-03	Mach. Screw, 6-32 x 3/16, P-PH-S
b)	01-7517	Switch Mounting Bracket
7c)	01-7495	Switch Bracket
d)	17-1042	Drop Target Switch
e)	4004-01003-10	Mach. Screw, 4-40 x 5/8, P-PH-S
8	4410-01132-00	Nut, 10-32 ESN
9	4006-01017-04	Mach. Screw, 6-32 x 1/4
10	02-3972	Drop Target Plunger
11	4700-00023-00	Washer, 13/16 o.d. x 5/8 i.d., 16 ga.
12	AE-23-800-04	Coil Assembly
13	03-7066-4	Coil Sleeve
14	01-6451-3A	Coil Support Angle
15	4006-01017-04	Mach. Screw, 6-32 x 1/4, P-RH-S
16	A-8037	Coil Stop Assembly
17	4106-01001-07	Sheet Metal Screw, #6 x 7/16, P-PH-ST

Multi-Ball™ Ejector / Ball Trough Feeder

p/n C-8492

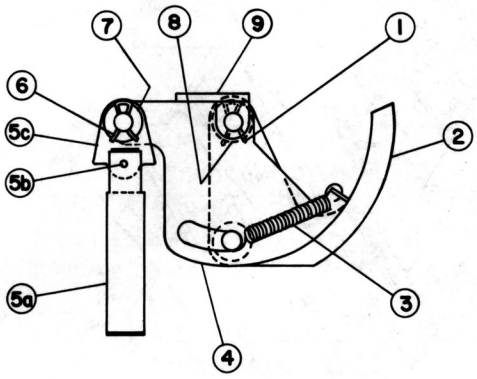

Item	Part No.	Description
1	12-6227	Clip, Hair Pin
2	A-8247	Ball Eject Cam Assembly
3	10-362	Spring
4	A-6949-L	Spring Plate Assembly
5	A-8050	Plunger Assembly
a)	02-3407	Coil Plunger
b)	20-8716-5	Roll Pin
c)	01-1789	Armature Link
6	12-6227	Clip, Hair Pin
7	4700-00030-00	Washer, 1/2 o.d. x 17/64 i.d. x 15 ga.
8	4700-00103-00	Washer, 1/2 o.d. x .265 i.d. x .015 thk.
9	A-8268	Mounting Bracket Assembly

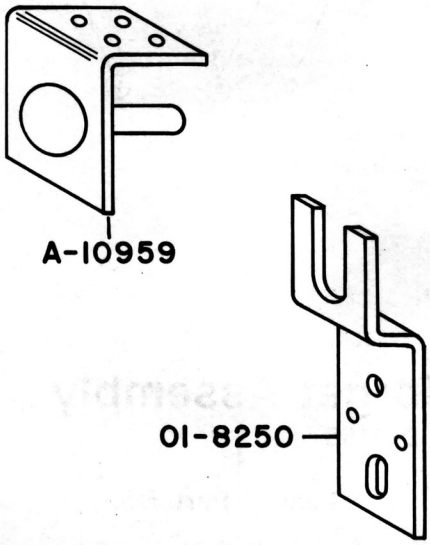

Playfield Pivot & Hinge Bracket

Playfield Parts

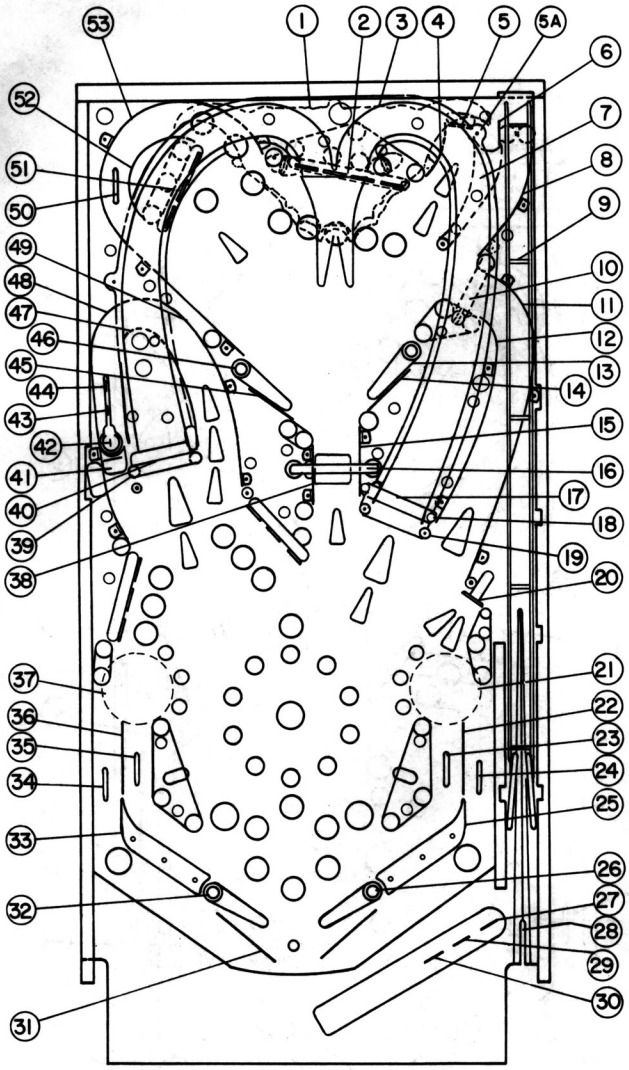

Item	Part No.	Description
44	A-5844-45	Rollover Wire & Bracket
45	12-6466-9	Wire Ball Guide, 2-1/4"
46	C-9953-L-2	Upper Flipper Assembly
47	12-6674	Ball Guide Wire
48	C-11151	Ball Guide Assembly
49	C-11150	Ball Guide Assembly
50	A-5844-35	Rollover Wire & Bracket
51	D-9355	3-Bank Drop Target
52	12-6592	Ball Guide Wire
53	C-8763	Ball Guide Assembly

Item	Part No.	Description
1	03-7956	Lizard Head
2	D-10883	4-Bank Drop Target Assembly
3	C-10772	Ramp & Tongue Assembly
4	12-6673	Wire Ball Guide
5	A-9268	Stationary Target
5A	B-11250	Plastic Ball Guide Assembly
6	12-6466-7	Wire Ball Guide, 1-3/4"
7	B-8806	Upper Ball Guide Assembly
8	B-8766	Upper Right Ball Guide Assembly
9	D-10748	Wire Frame Ball Chute Assembly
10	B-11235	Ball Gate Assembly
a)	01-6644	Ball Gate Bracket
b)	12-6620	Switch Actuator
c)	12-6505	Ball Gate Wire
11	C-10845	Ball Guide Assembly
12	B-10844	Ball Guide Assembly
13	C-9953-R-2	Upper Flipper Assembly
14	12-6466-10	Wire Ball Guide, 2-1/2"
15	A-10842	Ball Guide Assembly
16	B-11194	Spinning Target Assembly
17	B-11235	Ball Gate Assembly
a)	01-6644	Ball Gate Bracket
b)	12-6620	Switch Actuator
c)	12-6505	Ball Gate Wire
18	02-3408	Post
19	02-4036	Post
20	A-9268	Stationary Target
21	A-8447	Magna-Save™ Magnet Assembly
22	12-6466-12	Wire Ball Guide, 3"
23	A-5844-35	Rollover Wire & Bracket
24	A-5844-35	Rollover Wire & Bracket
25	A-8108-R	Flipper Return Frame
26	C-9952-R	Flipper Assembly
27	A-8645	Rollover Wire & Bracket
28	A-5844-46	Rollover Wire & Bracket
29	A-11251	Rollover Wire & Bracket
30	A-5844-45	Rollover Wire & Bracket
31	12-6468	Anti-rebound Wire
32	C-9953-L	Flipper Assembly
33	A-8108-L	Flipper Return Frame
34	A-5844-35	Rollover Wire & Bracket
35	A-5844-35	Rollover Wire & Bracket
36	12-6466-12	Wire Ball Guide, 3"
37	A-8447	Magna-Save™ Magnet Assembly
38	A-10841	Ball Guide Assembly
39	02-4224	Bumper Post
40	A-10754	Ball Gate Assembly
a)	01-8134	Ball Gate Bracket
b)	12-6620	Switch Actuator Wire
c)	12-6666	Ball Gate Wire
41	01-6933-1	Ball Stop Bracket
42	17-1075	Microswitch
43	A-5844-44	Rollover Wire & Bracket

Switches

Item	Part No.	Description
1	A-8476	Plumb Bob Tilt
2	B-6572	Ball Roll Tilt
3	SW-1A-126	Credit Button
4	904845*	Right Coin Chute (* - Coinco
5	904845*	Center Coin Chute p/n)
6	904845*	Left Coin Chute
7	904704*	Slam Tilt
8	5641-09369-00	High Score Reset
9	SW-1A-117	Playfield Tilt
10	17-1067	Outhole
11	SW-1A-138	Ball Shooter Lane
12	5647-09957-00	Left Trough
13	5647-09957-00	Center Trough
14	5647-09633-00	Right Trough
15	SW-1A-124	Turnaround
16	SW-1A-124	Left Return Lane
17	SW-1A-124	Right Return Lane
18	SW-1A-124	Left Outlane
19	SW-1A-124	Right Outlane
20	17-1042	4-Bank
21	17-1042	4-Bank
22	17-1042	4-Bank
23	17-1042	4-Bank
24	A-9268	Top Right Stationary Target
25	17-1042	3-Bank
26	17-1042	3-Bank
27	17-1042	3-Bank
28	SW-1A-118	Spinner
29	SW-1A-118	Right Ramp
30	SW-1A-118	Right Chute to Top
31	SW-1A-118	Left Ramp
32	17-1082	Multi-Ball 1
33	5647-09957-00	Multi-Ball 2
34	17-1075	Multi-Ball 3
35	A-9270	L Stationary Target
36	A-9270	I Stationary Target
37	A-9270	Z Stationary Target
38	A-9268	A Stationary Target
39	A-9268	R Stationary Target
40	A-9268	D Stationary Target
41	A-9268	Right Special Arrow
42	5647-09633-00	Ramp Tongue
43	SW-1A-122	Left Kicker (scoring)**
44	SW-1A-122	Right Kicker (scoring)**
45	SW-1A-126	Left Magnet
46	SW-1A-126	Right Magnet
47	Not Used	Not Used
48	SW-1A-150	Right Flipper Lane Change
49-64	Not Used	Not Used
-	SW-1010A-13	Flipper Button

** [Kicker Actuating Sw: A-4834-H; B-8734 w/RC]

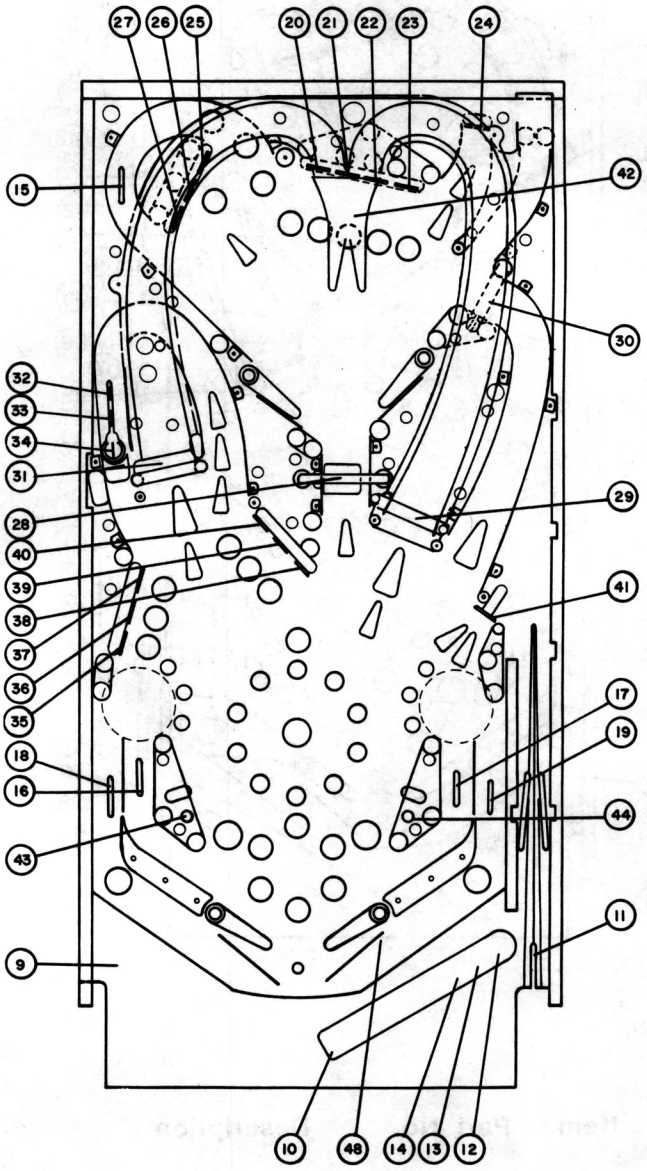

Lamps

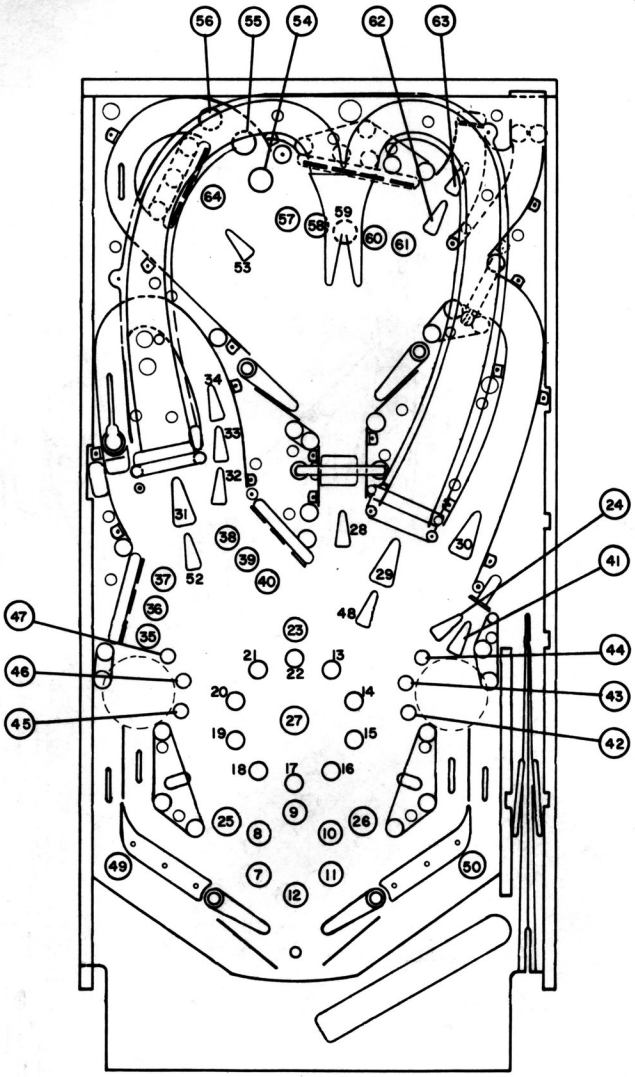

Lamp	Location/Description
55	Turn 20K
56	Turn 40K
57	4-Bank 20K
58	4-Bank 40K
59	4-Bank 60K
60	4-Bank 80K
61	4-Bank 100K
62	Top Right 50K
63	Top Right Release
64	3-Bank Special

Lamp	Location/Description
1	Game Over (Backglass)
2	Match (Backglass)
3	Sword (Backglass)
4	Sword (Backglass)
5	Ball In Play (Backglass)
6	Shoot Again (Backglass)
7	2X
8	3X
9	4X
10	5X
11	10X
12	Shoot Again (Playfield)
13	1
14	2
15	3
16	4
17	5
18	6
19	7
20	8
21	9
22	10
23	20
24	Extra Ball (bottom)
25	All Scores 2X
26	All Scores 3X
27	Bonus Holdover collected
28	Spinner
29	Right Ramp B
30	Lane to Top Bonus Holdover Arrow
31	Left Ramp A
32	Multi-Ball Arrow (lower)
33	Multi-Ball Arrow (middle)
34	Multi-Ball Arrow (upper)
35	L
36	I
37	Z
38	A
39	R
40	D
41	Special (Bottom Right Stationary Target)
42	Left Magnet (lower)
43	Left Magnet (middle)
44	Left Magnet (upper)
45	Right Magnet (lower)
46	Right Magnet (middle)
47	Right Magnet (upper)
48	Right Ramp Mystery
49	Left Drain
50	Right Drain
51	[Not Used]
52	Left Ramp Mystery
53	Extra Ball (top)
54	Turn 10K

Solenoids/ Flashers

Item	Part No.	Description
1	AE-23-800-01	Trough Kicker (Outhole)
2	AE-23-800-04	3-Bank Raise
3	AE-23-800-04	4-Bank Raise 1 (left 2)
4	AE-23-800-04	4-Bank Raise 1 (right 2)
5	AE-23-800-03	Lockup Eject (Multi-ball)
6	#63 Flashlamps	Lockup Flasher
7	#63 Flashlamps	Left Magnet Flasher
8	AE-23-800-03	Ball Feed
9	5580-09613-00	Left Magnet Relay
10	5580-09613-00	Right Magnet Relay
11	5580-09555-00	General Illumination Relay
12	#63 Flashlamps	3-Bank Flasher
13	#63 Flashlamps	Eyes (Backbox & Head)
14	AE-23-800-02	Credit Knocker
15	SM-29-1000-DC	Bell
16	404603-2*	Coin-Lockout Relay
17	AE-23-800-03	Left Kicker
18	AE-23-800-03	Right Kicker
19	#63 Flashlamps	Right Magnet Flasher
20	Not Used	
21	Not Used	
22	Not Used	
-	FL 24/600-30/2600-50VDC	Upper Right Flipper
-	FL 23/600-30/2600-50VDC	Right Flipper
-	FL 24/600-30/2600-50VDC	Upper Left Flipper
-	FL 23/600-30/2600-50VDC	Left Flipper

* - Coinco p/n

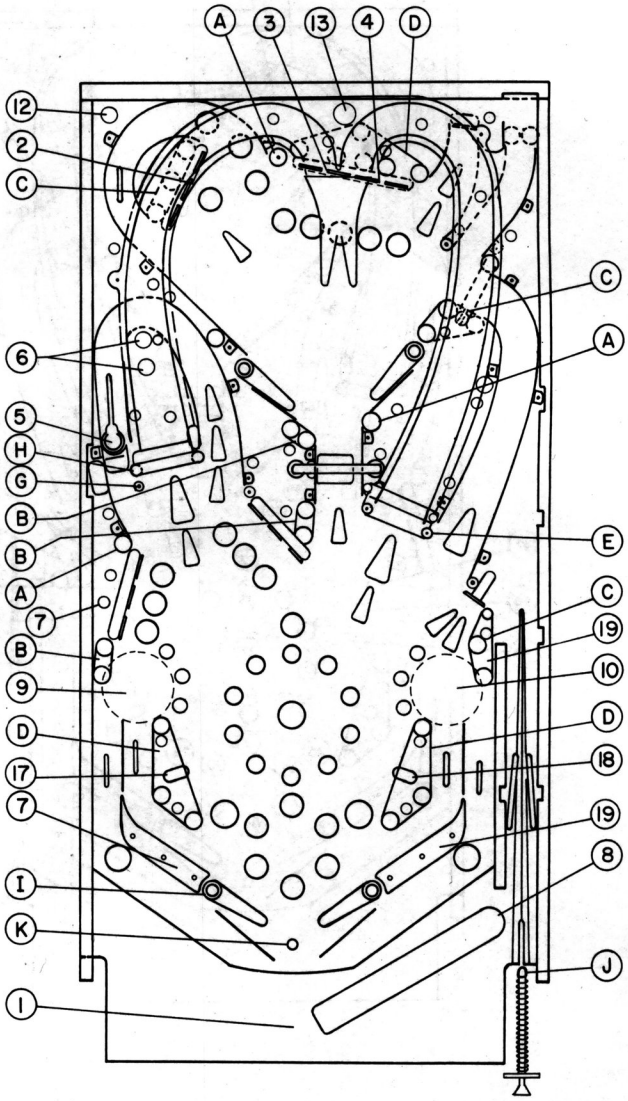

Rubber Parts

Item	Part No.	Description
A	23-6300	5/16" Ring
B	23-6301	3/4" Ring
C	23-6304	1-1/2" Ring
D	23-6306	2-1/2" Ring
E	23-6552	Sleeving
G	23-6535	Bumper
H	23-6580	Bumper
I	23-6519-4	Red Ring
J	23-6327	Ball Shooter Tip
K	23-6535	Bumper

Section 3

Reference Diagrams & Schematics

- **Diagrams and Schematics:**

  Cabinet Wiring
  A/N Master Display Board
  Background Sound Board
  Interboards Signals
  CPU Board
  Power Supply Board
  Displays
  Power Wiring

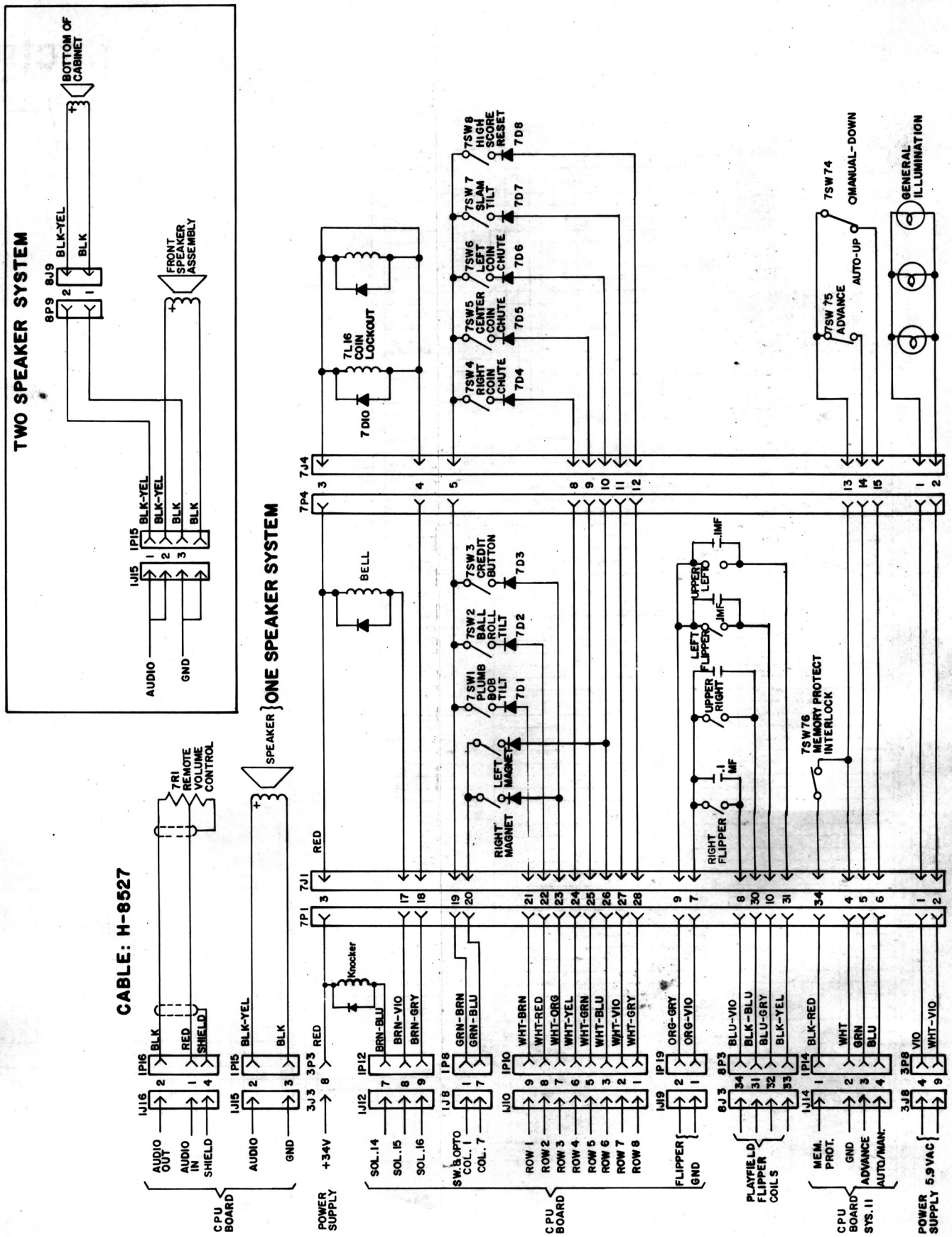

Cabinet Wiring Diagram

POWER TABLE					
TYPE	REF. DESIG.	+5V	GND	+90	-100
14050	U10, U11, U15-U18	1	8	-	-
14001	U3, U4, U7, U8	14	7	-	-
UDN 6118	U1, U2, U5, U6	-	9	10	-
UDN 7180	U9, U12, U13, U14	-	9	-	10

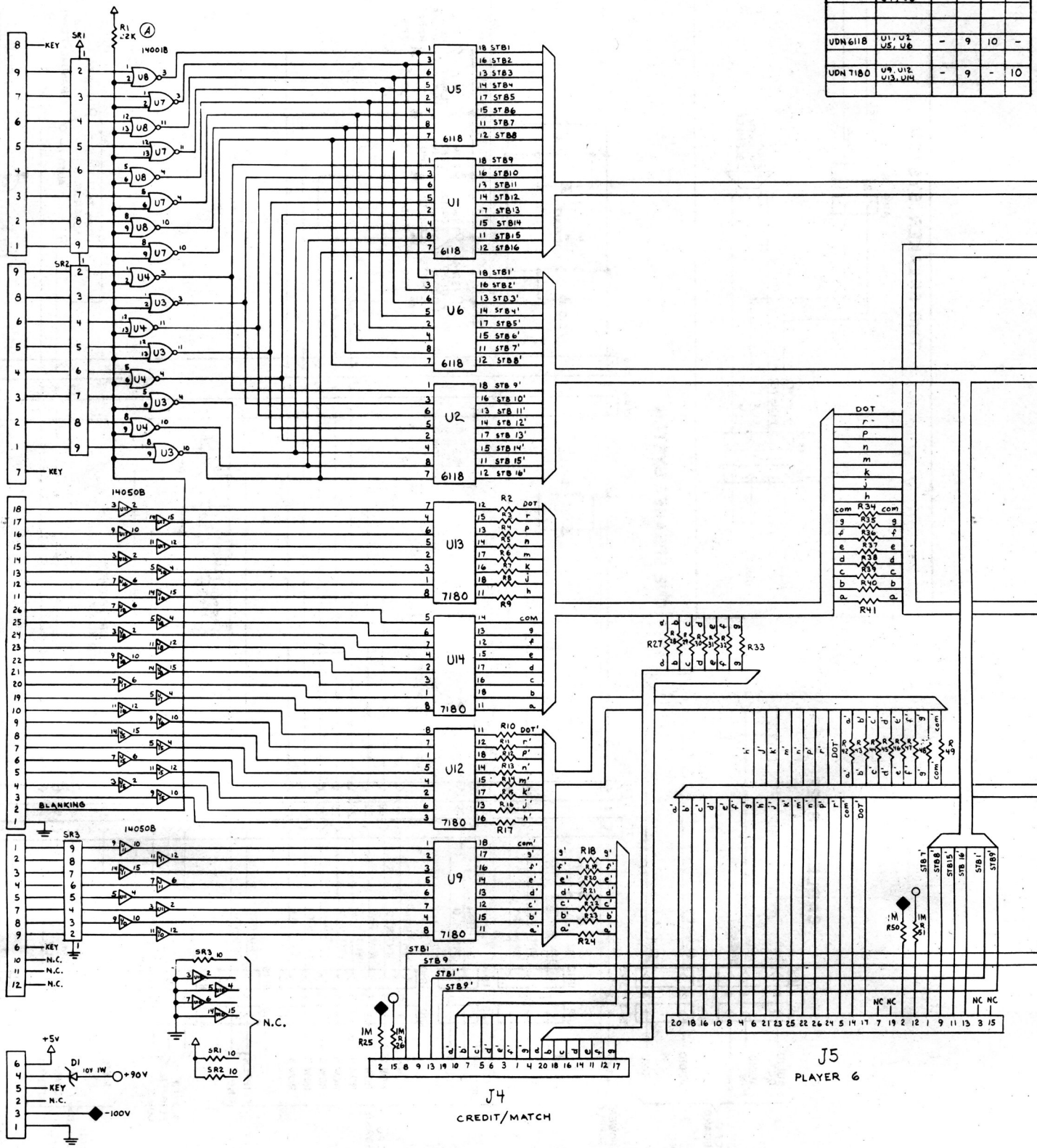

VALLE OF UNMARKED RESISTORS			
DESIGNATORS	OHMS	WATTS	%
R3-R5, R7-R9, R38, R41, R11-R13, R15-R17	8.2K	1/2W	5
R36, R37, R39, R40, R18-R24, R27-R33, R42-R48	10K	1/2W	5
R49	15K	1/4W	5
R1, R2, R6, R10, R14, R34, R35	18K	1/4W	5

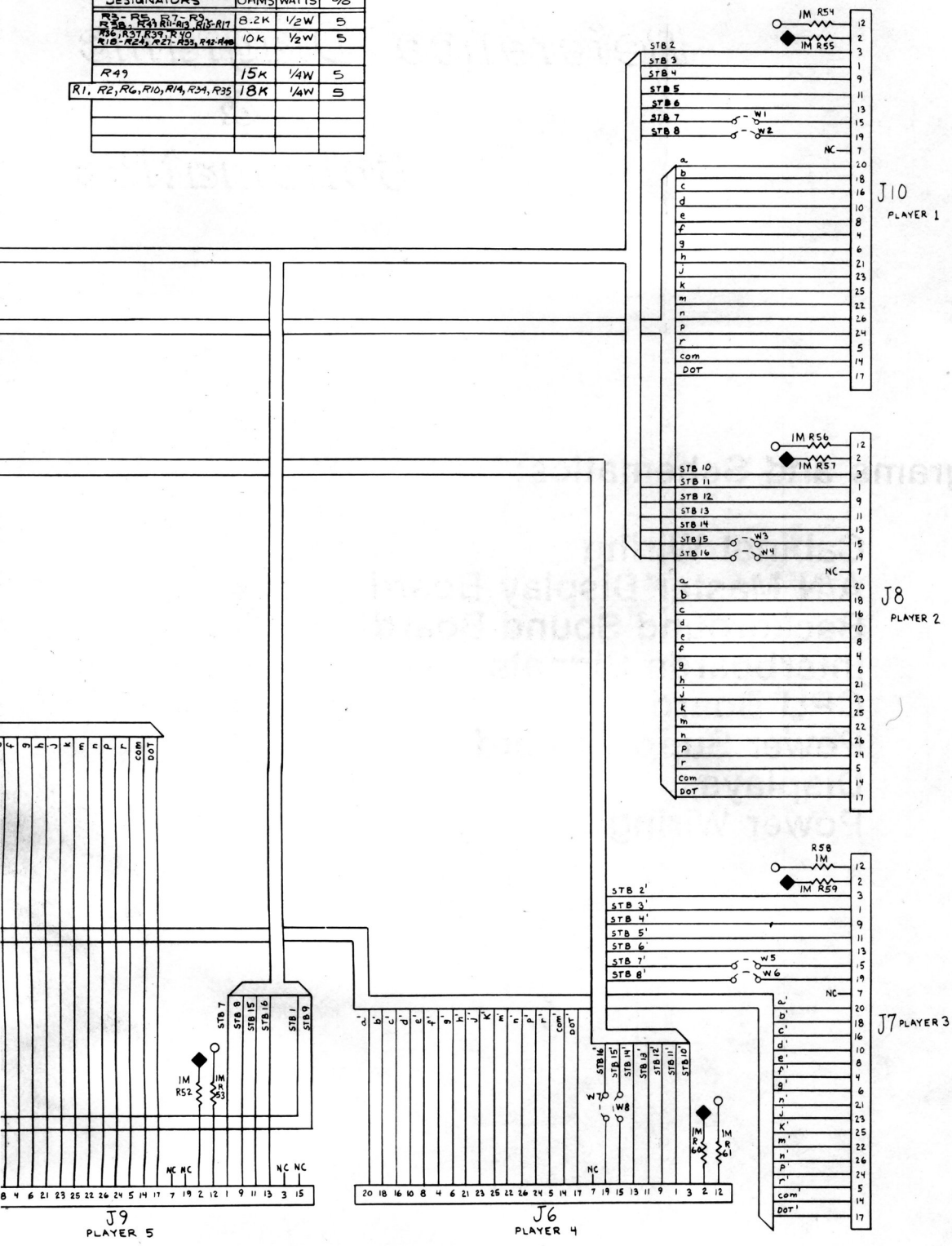

Alphanumeric Master Display Board Schematic

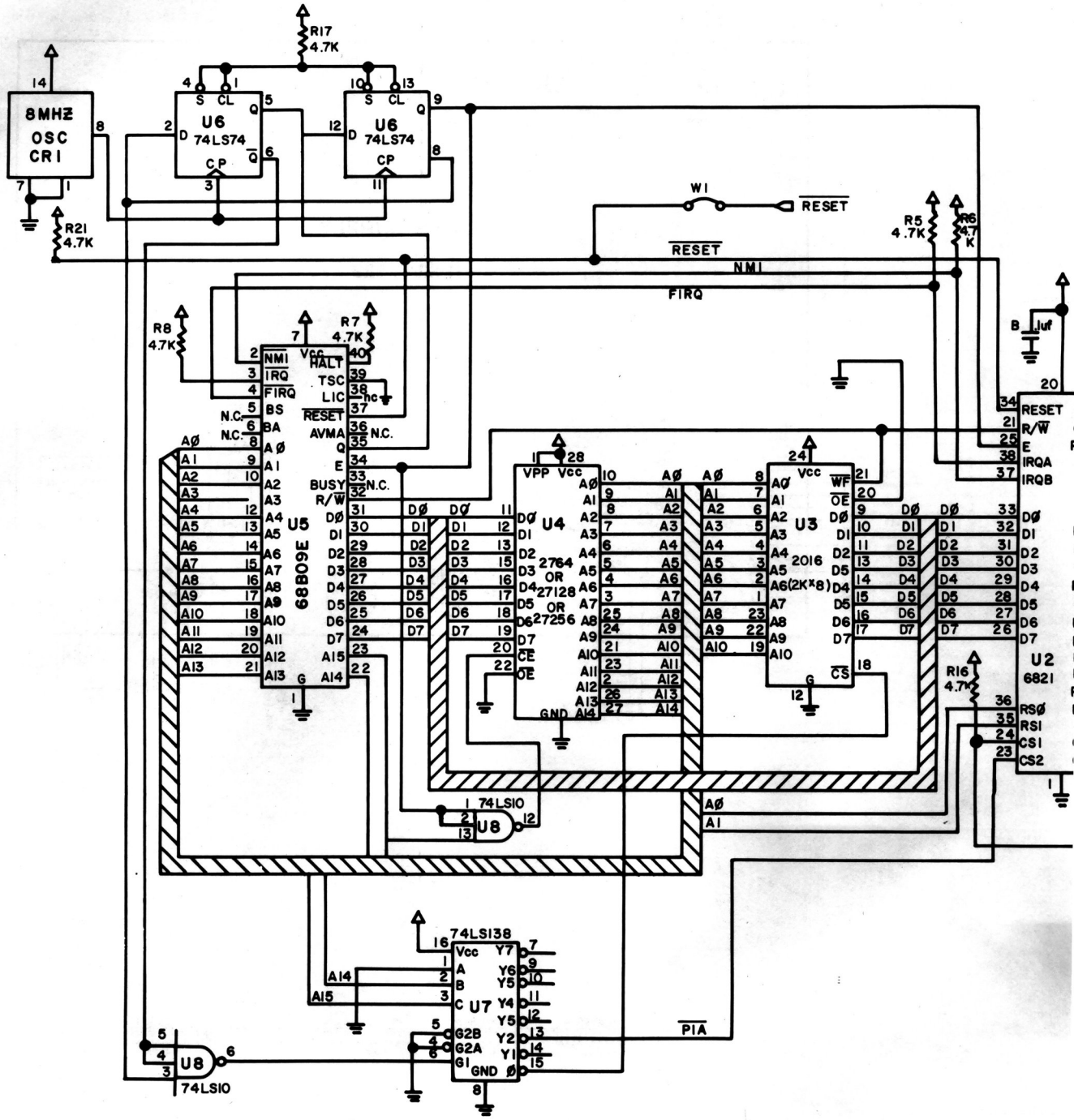
8MHZ
OSC
CR1
R21
4.7K
R17
4.7K
U6
74LS74
U6
74LS74
W1
RESET
R5
4.7K
R6
4.7K
NMI
FIRQ
R8
4.7K
R7
4.7K
U5
68B09E
U4
2764
OR
27128
OR
27256
U3
2016
(2K x 8)
U2
6821
R16
4.7K
74LS10
U8
74LS138
U7
PIA
74LS10
U8

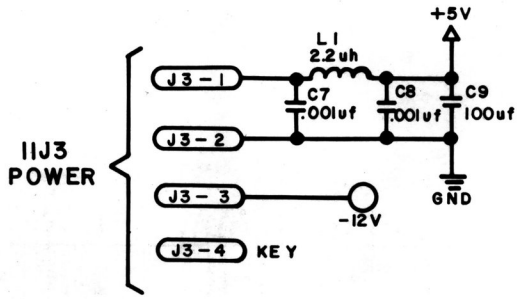
+5V
L1
2.2uh
J3-1
C7
.001uf
C8
.001uf
C9
100uf
J3-2
J3-3
GND
-12V
J3-4
KEY
11J3
POWER

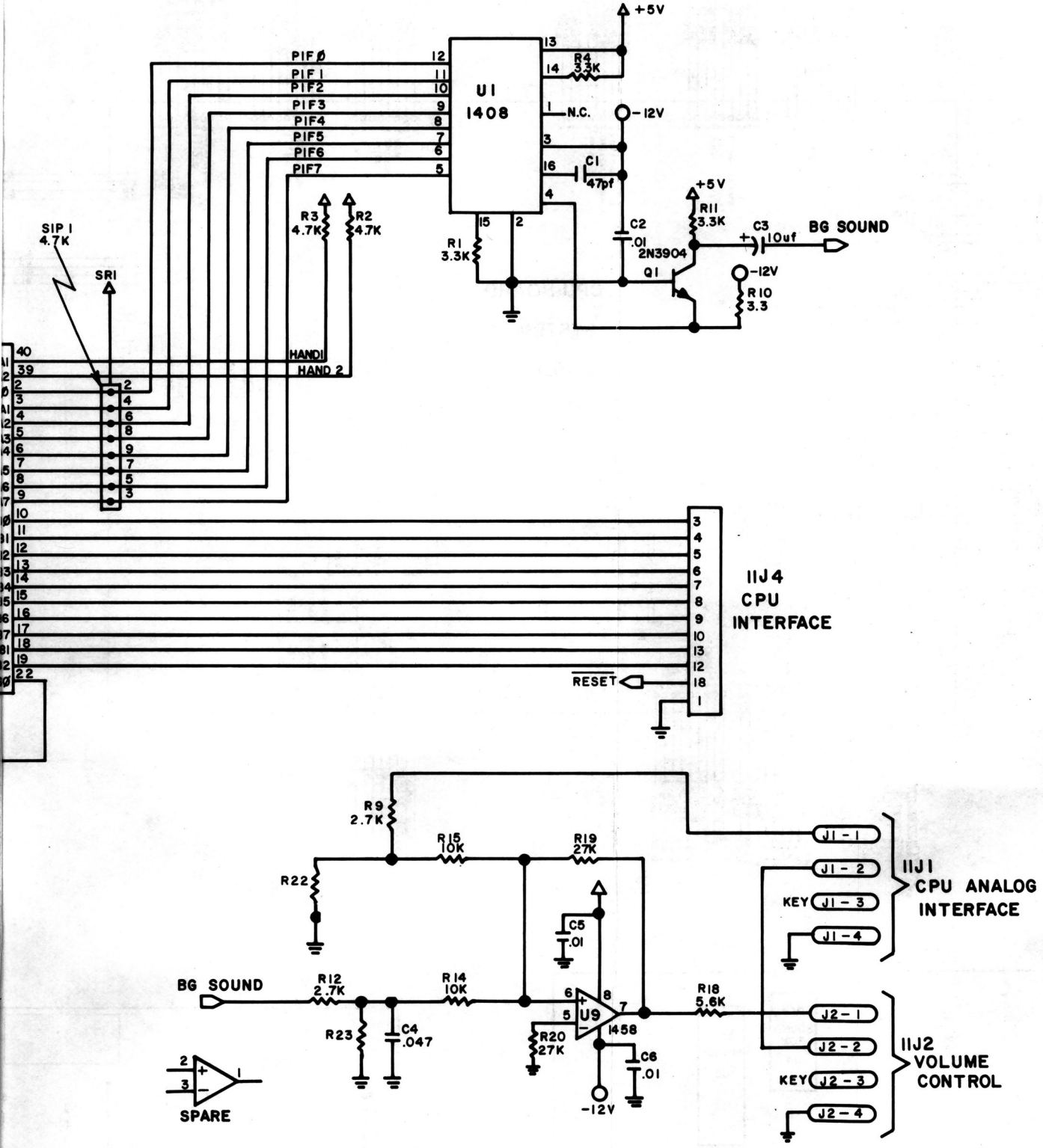

Background Sound Board Schematic

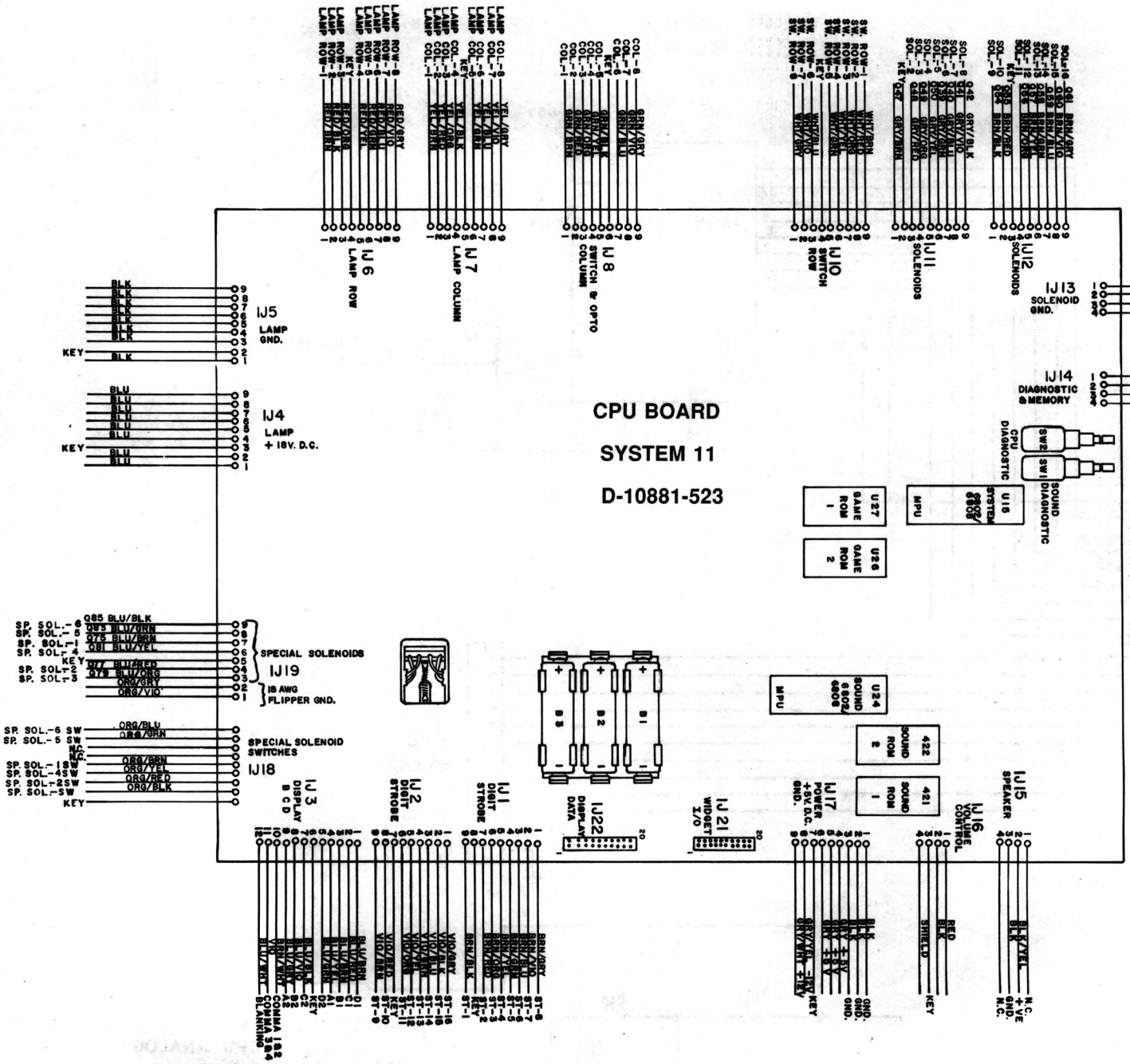
CPU BOARD
SYSTEM 11
D-10881-523
IJ6 LAMP ROW
IJ7 LAMP COLUMN
IJ8 SWITCH & OPTO COLUMN
IJ10 SWITCH ROW
IJ11 SOLENOIDS
IJ12 SOLENOIDS
IJ13 SOLENOID GND.
IJ14 DIAGNOSTIC & MEMORY
IJ5 LAMP GND.
IJ4 LAMP +18V. D.C.
IJ19 SPECIAL SOLENOIDS
18 AWG FLIPPER GND.
IJ18 SPECIAL SOLENOID SWITCHES
IJ3 DISPLAY
IJ2 DIGIT STROBE
IJ1 DIGIT STROBE
IJ22 DISPLAY DATA
IJ21 WIDGET I/O
IJ17 POWER +5V.D.C. GND.
IJ16 VOLUME CONTROL
IJ15 SPEAKER
U27 GAME ROM 1
U26 GAME ROM 2
MPU
U16 SYSTEM 6802/6808
SW2 CPU DIAGNOSTIC
SW1 SOUND DIAGNOSTIC
U24 SOUND 6802/6808
422 SOUND ROM 2
421 SOUND ROM 1
B3
B2
B1

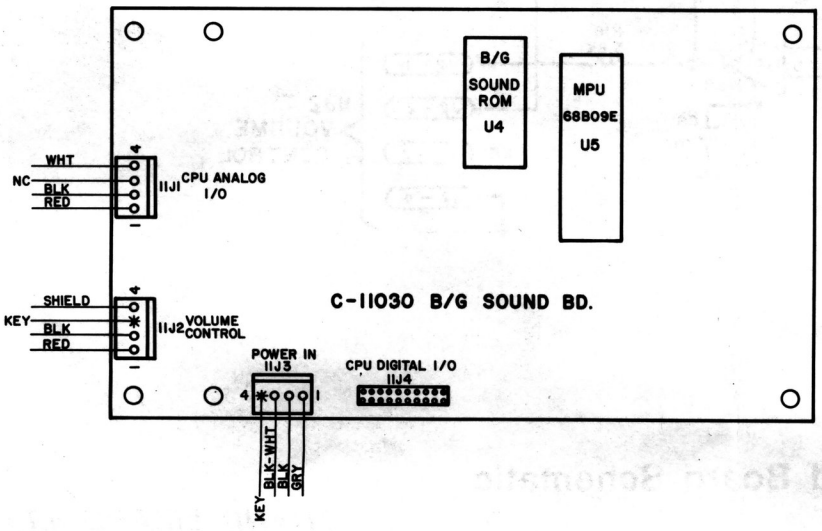
B/G SOUND ROM U4
MPU 68B09E U5
C-11030 B/G SOUND BD.
IIJ1 CPU ANALOG I/O
IIJ2 VOLUME CONTROL
POWER IN IIJ3
CPU DIGITAL I/O IIJ4

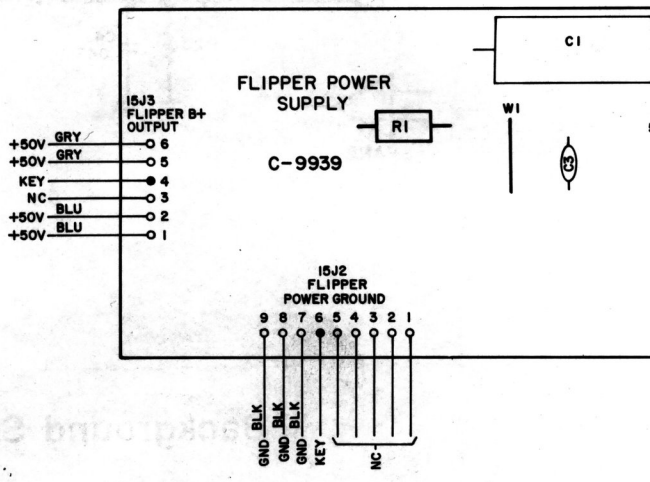
FLIPPER POWER SUPPLY
C-9939
R1
W1
C1
15J3 FLIPPER B+ OUTPUT
15J2 FLIPPER POWER GROUND

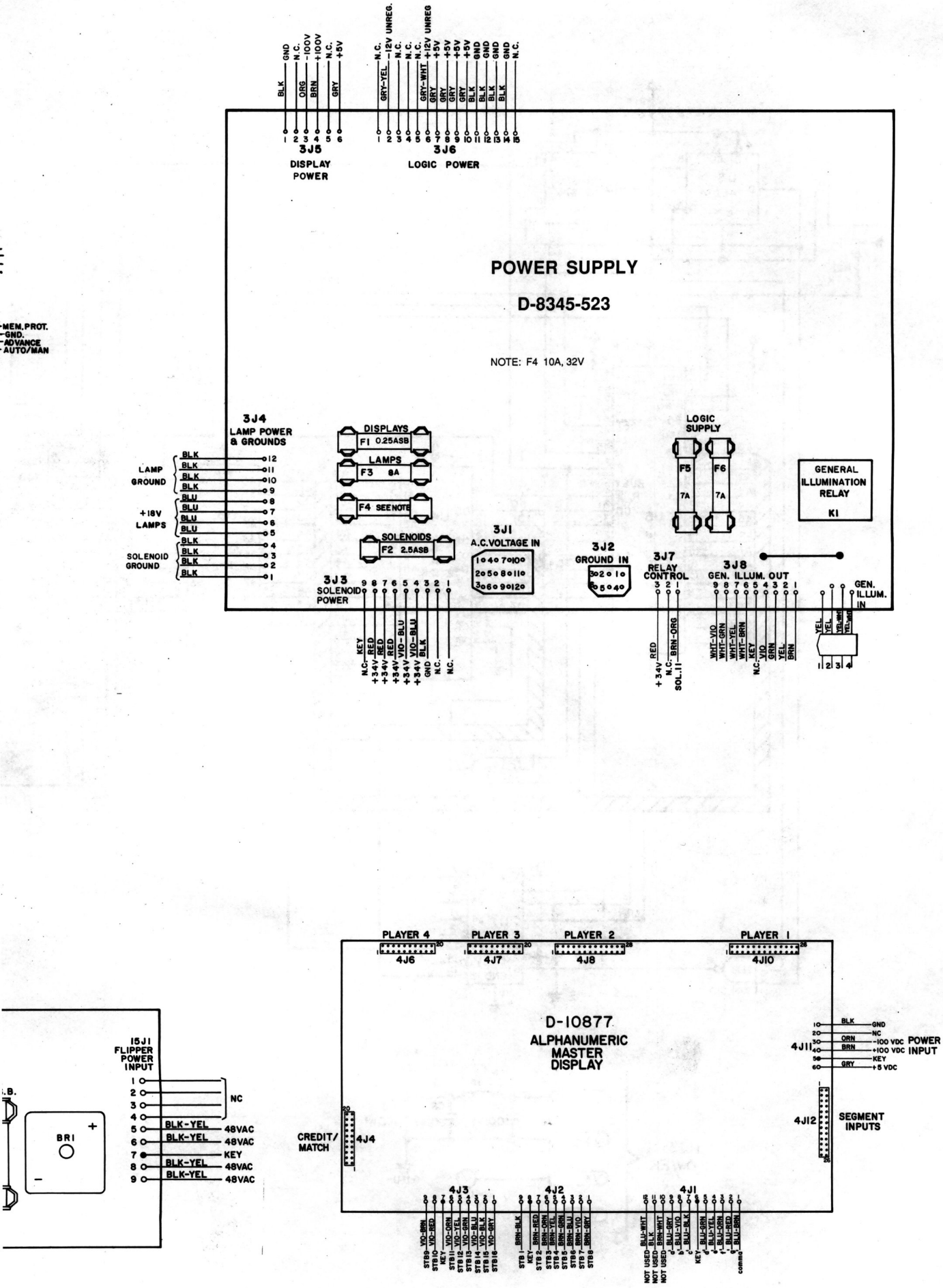
POWER SUPPLY
D-8345-523
NOTE: F4 10A, 32V
3J5
DISPLAY POWER
3J6
LOGIC POWER
3J4
LAMP POWER & GROUNDS
LAMP GROUND
+18V LAMPS
SOLENOID GROUND
DISPLAYS
F1 0.25ASB
LAMPS
F3 8A
F4 SEE NOTE
SOLENOIDS
F2 2.5ASB
3J1
A.C. VOLTAGE IN
3J2
GROUND IN
3J3
SOLENOID POWER
3J7
RELAY CONTROL
LOGIC SUPPLY
F5
7A
F6
7A
3J8
GEN. ILLUM. OUT
GENERAL ILLUMINATION RELAY
K1
GEN. ILLUM. IN
-MEM. PROT.
-GND.
-ADVANCE
-AUTO/MAN
15J1
FLIPPER POWER INPUT
NC
48VAC
KEY
BRI
PLAYER 4
PLAYER 3
PLAYER 2
PLAYER 1
4J6
4J7
4J8
4J10
D-10877
ALPHANUMERIC MASTER DISPLAY
4J11
POWER INPUT
-100 VDC
+100 VDC
+5 VDC
4J12
SEGMENT INPUTS
CREDIT/ MATCH
4J4
4J3
4J2
4J1

REV	DESCRIPTION OF CHANGE	ECN NO. DATE
	NPR	14894 11-6-85
A	SEE COVER SHEETS	14981
B	SEE COVER SHT.	15240 1-6-86
C	SEE COVER SHT.	15267 8-12-86

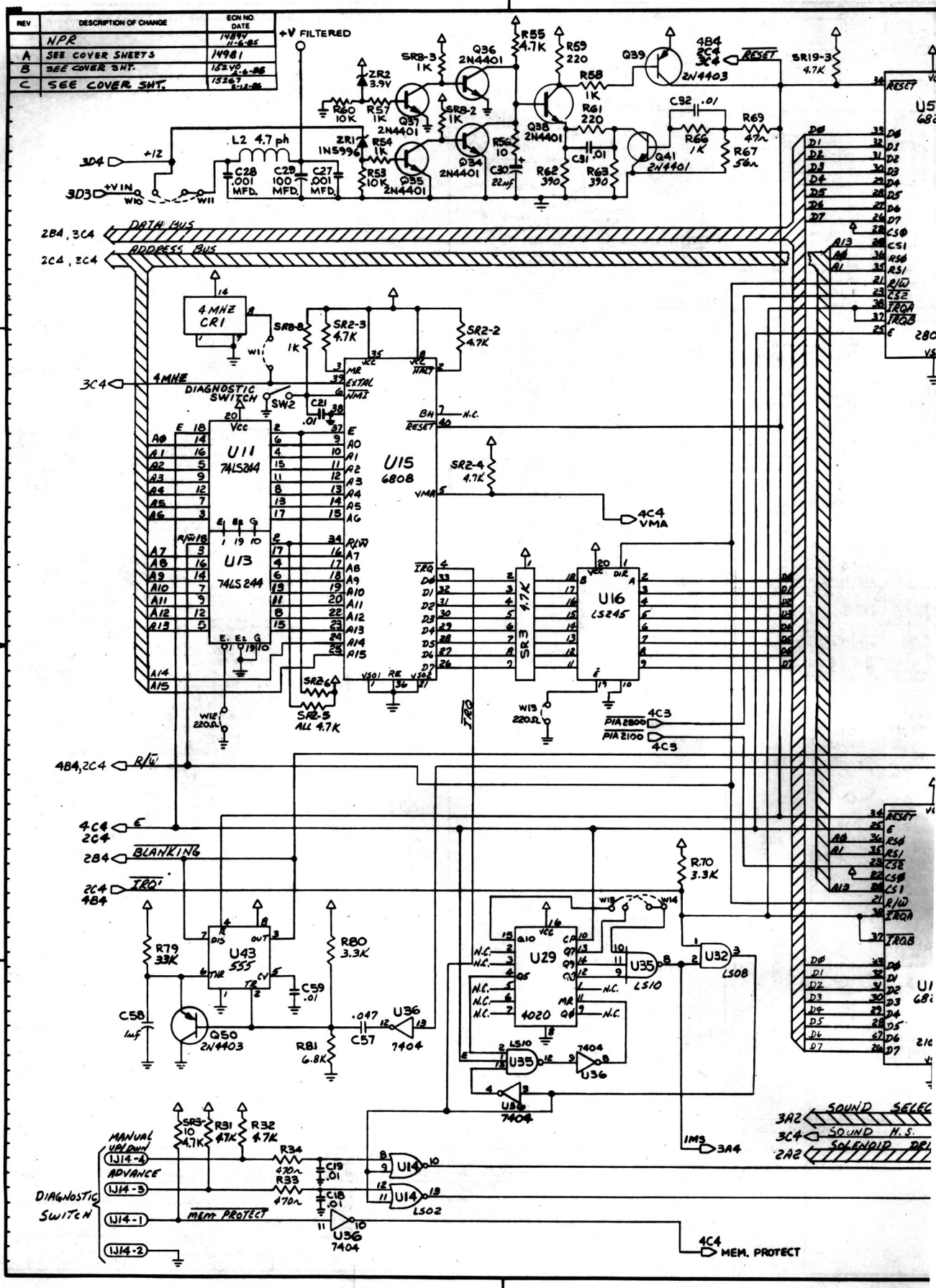

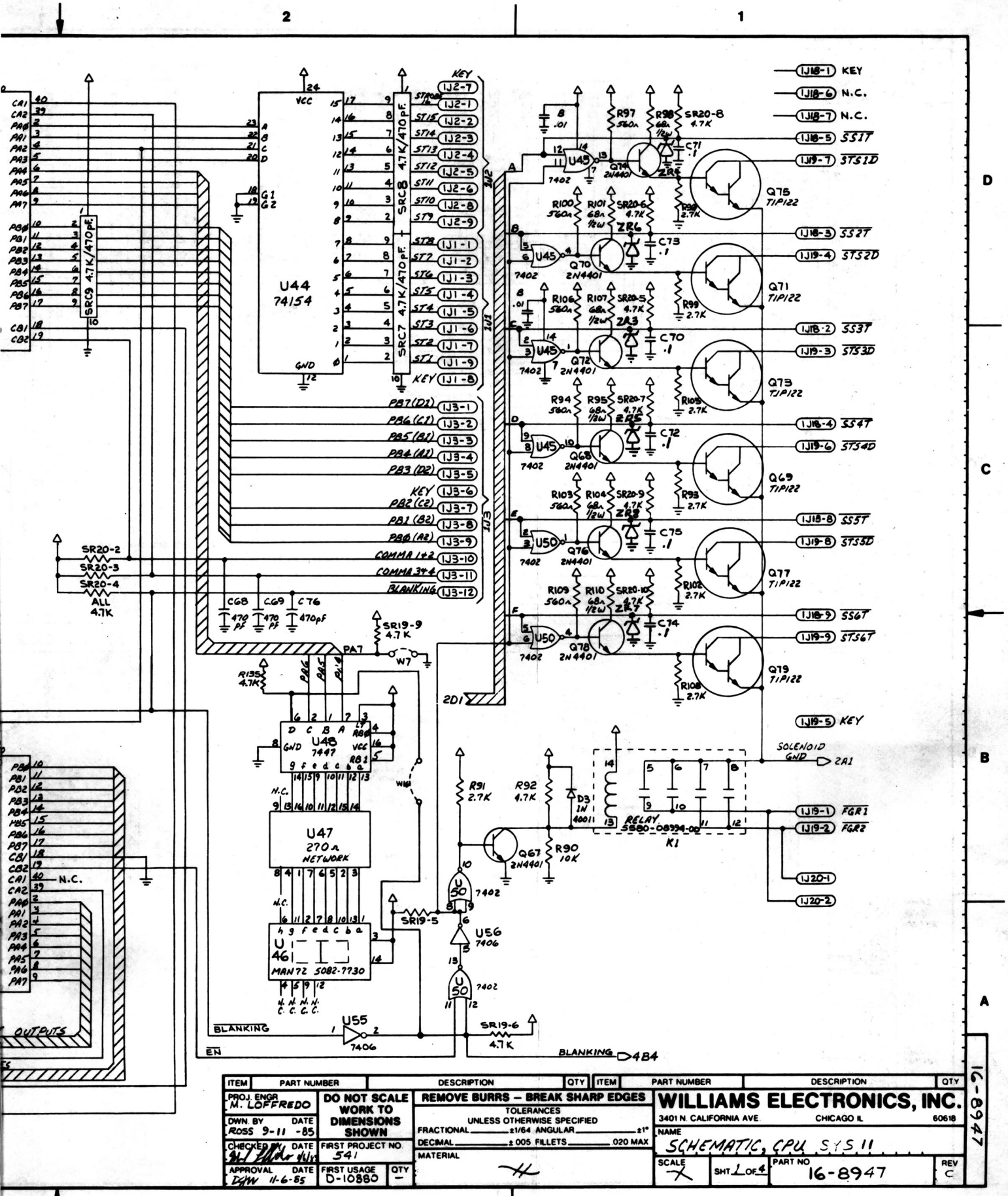

Schematic, System 11 CPU Board (16-8947, Sheet 1 of 4)

GRAND LIZARD 51

REV	DESCRIPTION OF CHANGE	ECN NO DATE
.	NPR	14844 11-6-85
A	SEE COVER SHEETS	14981 11-19-85
B	SEE COVER SHT.	15240 2-6-86
C	SEE COVER SHT.	15267 2-13-86

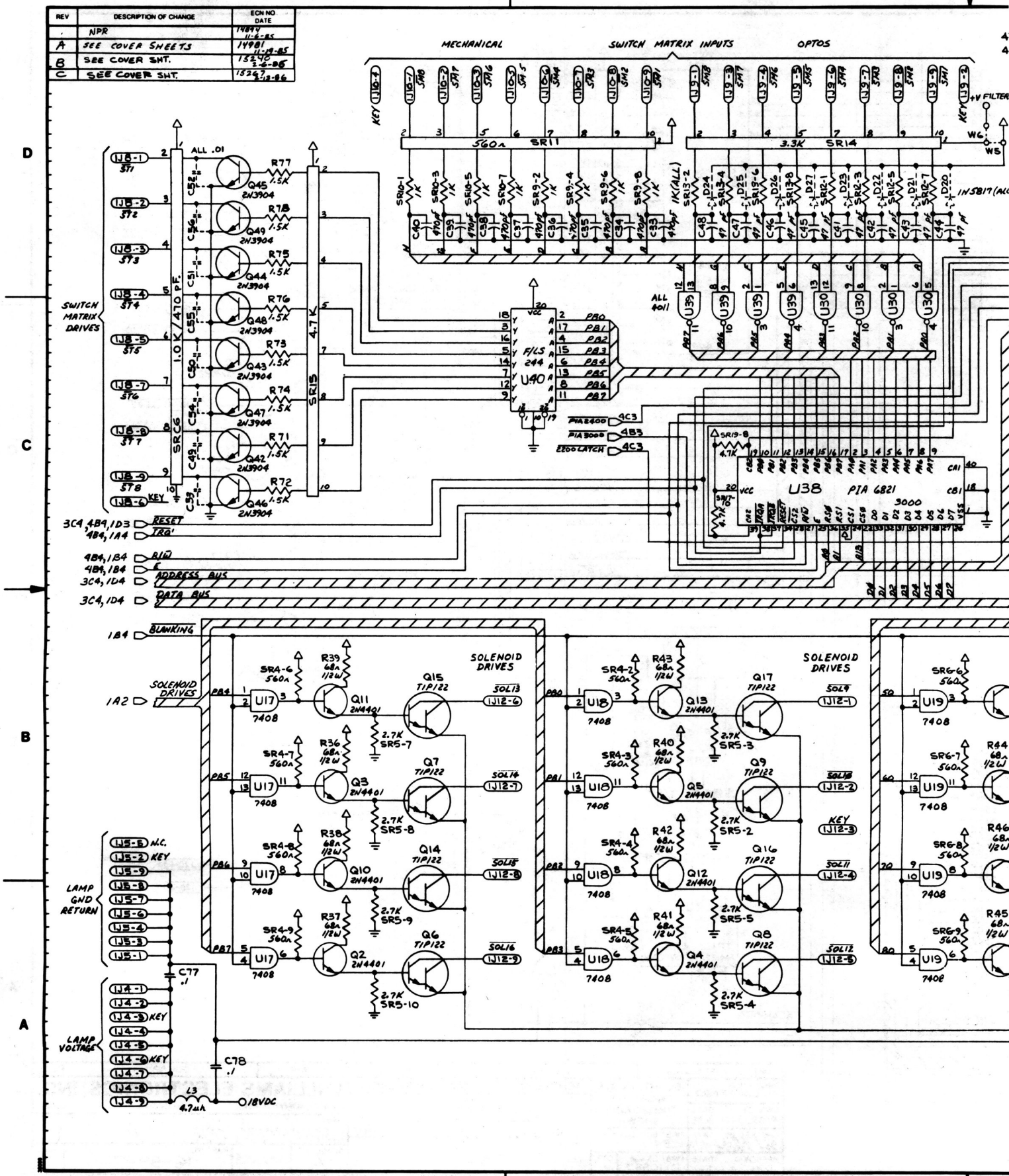

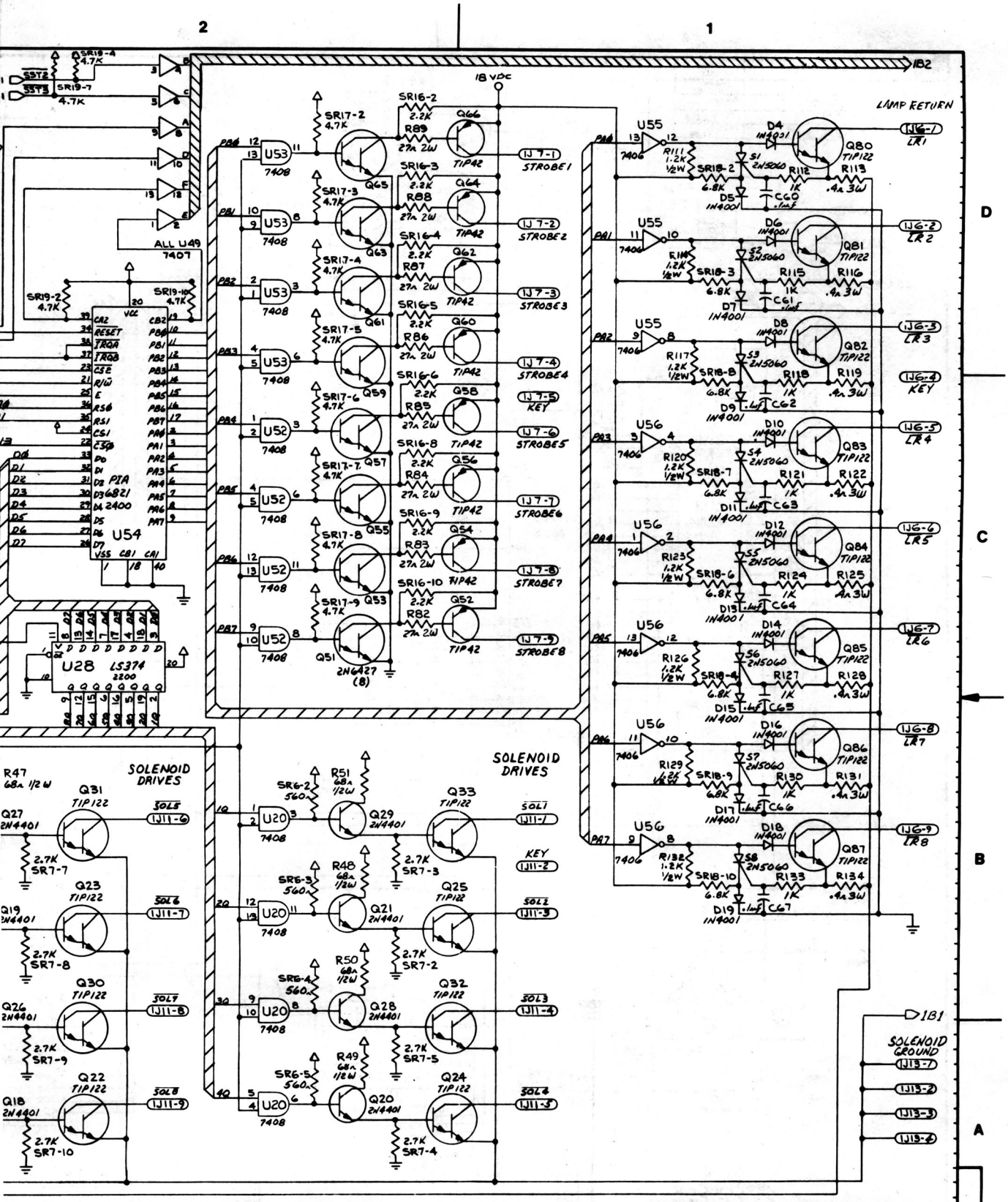

ITEM	PART NUMBER	DESCRIPTION	QTY	ITEM	PART NUMBER	DESCRIPTION	QTY

PROJ. ENGR. M. LOFFREDO
DWN. BY ROSS DATE 9-11-85
CHECKED BY DATE
APPROVAL DYW DATE 11-6-85

DO NOT SCALE WORK TO DIMENSIONS SHOWN

FIRST PROJECT NO. 541
FIRST USAGE D-10880 QTY —

REMOVE BURRS – BREAK SHARP EDGES
TOLERANCES UNLESS OTHERWISE SPECIFIED
FRACTIONAL ±1/64 ANGULAR ±1°
DECIMAL ±.005 FILLETS .020 MAX
MATERIAL

WILLIAMS ELECTRONICS, INC.
3401 N. CALIFORNIA AVE. CHICAGO IL 60618

NAME SCHEMATIC, CPU SYS 11
SCALE X SHT 2 OF 4 PART NO. 16-8947 REV C

16-8947

Schematic, System 11 CPU Board (16-8947, Sheet 2 of 4)

REV	DESCRIPTION OF CHANGE	ECN NO. DATE
	N.P.R.	14934 11-12-85
A	SEE COVER SHEETS	14981 11-19-85
B	SEE COVER SHT	15240 2-6-86
C	SEE COVER SHT	15267 2-13-86

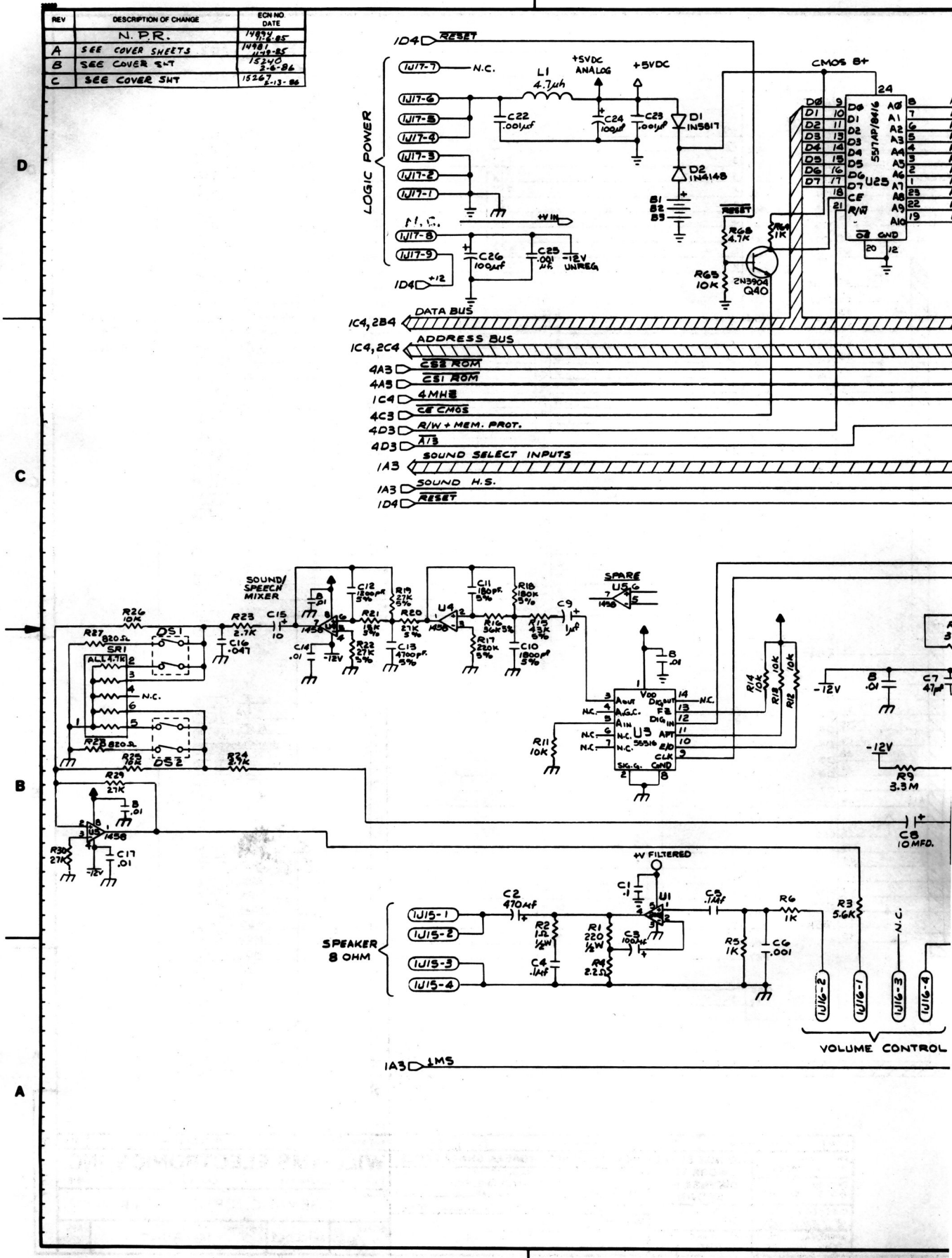

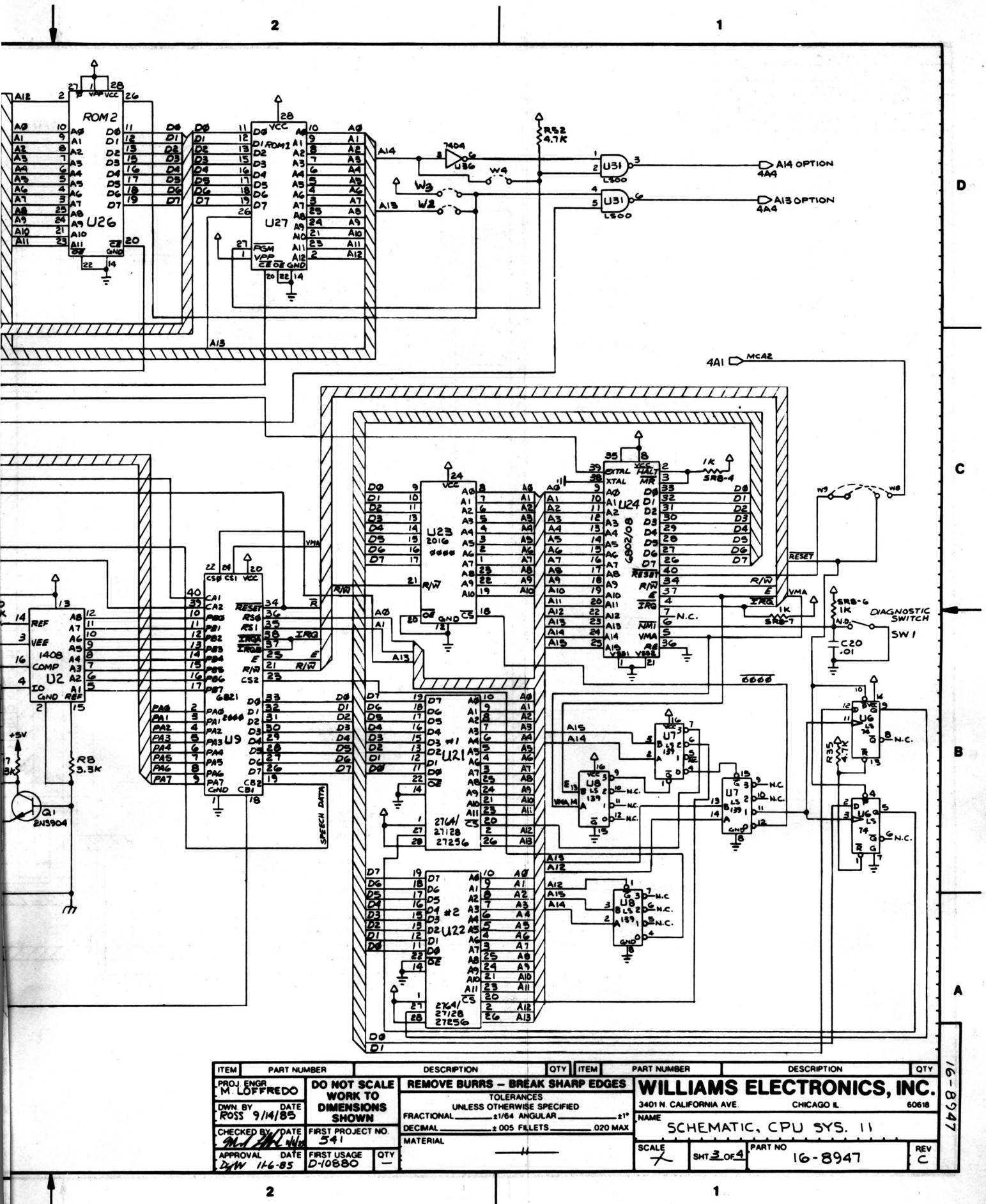

Schematic, System 11 CPU Board (16-8947, Sheet 3 of 4)

REV	DESCRIPTION OF CHANGE	ECN NO. DATE
	N. P. R.	14894 11-6-85
A	SEE COVER SHEETS	14981 12-19-85
B	SEE COVER SHT.	15240 2-5-86
C	SEE COVER SHT.	15267 5-13-86

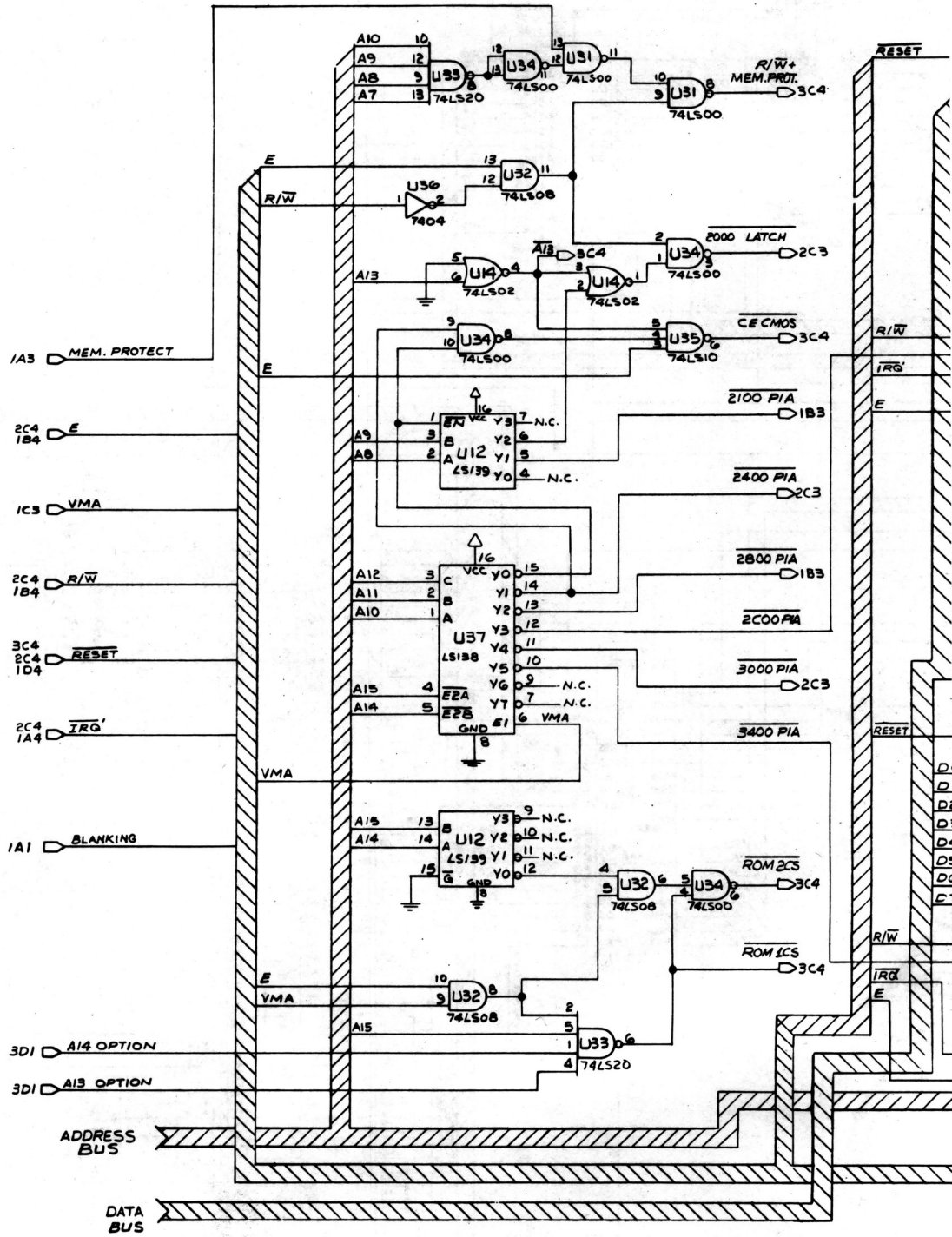

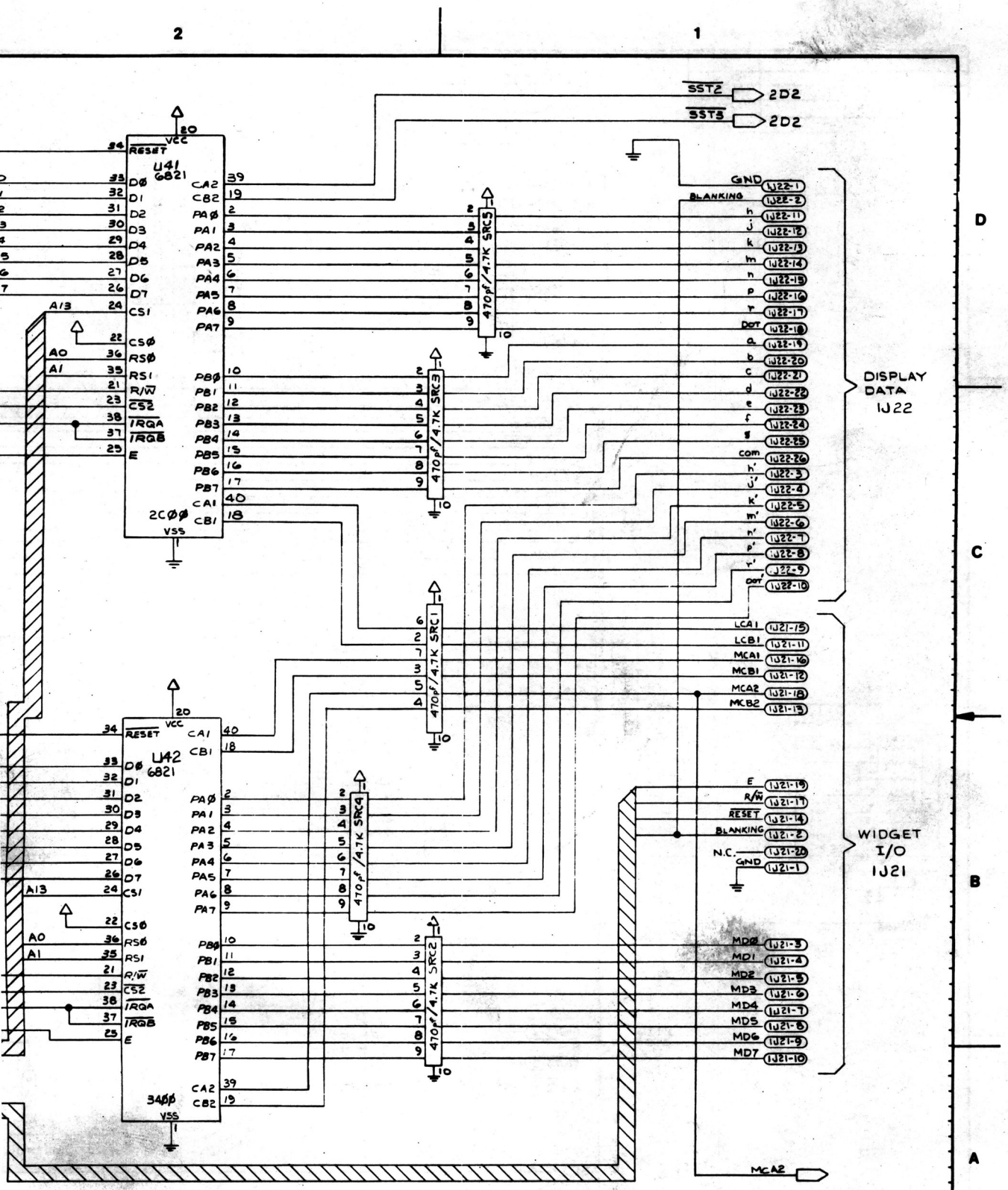

ITEM	PART NUMBER	DESCRIPTION	QTY	ITEM	PART NUMBER	DESCRIPTION	QTY

PROJ. ENGR M. LOFFREDO
DWN. BY ROSS DATE 8/1/85
CHECKED BY DATE 11/1/85
APPROVAL DATE 11-6-85

DO NOT SCALE WORK TO DIMENSIONS SHOWN

FIRST PROJECT NO. 541
FIRST USAGE D-10880 QTY —

REMOVE BURRS – BREAK SHARP EDGES
TOLERANCES UNLESS OTHERWISE SPECIFIED
FRACTIONAL ±1/64 ANGULAR ±1°
DECIMAL ±.005 FILLETS .020 MAX
MATERIAL —"—

WILLIAMS ELECTRONICS, INC.
3401 N. CALIFORNIA AVE. CHICAGO IL 60618

NAME SCHEMATIC, CPU SYS 11

SCALE N/S SHT 4 OF 4 PART NO 16-8947 REV C

16-8947

Schematic, System 11 CPU Board (16-8947, Sheet 4 of 4)

GRAND LIZARD 54

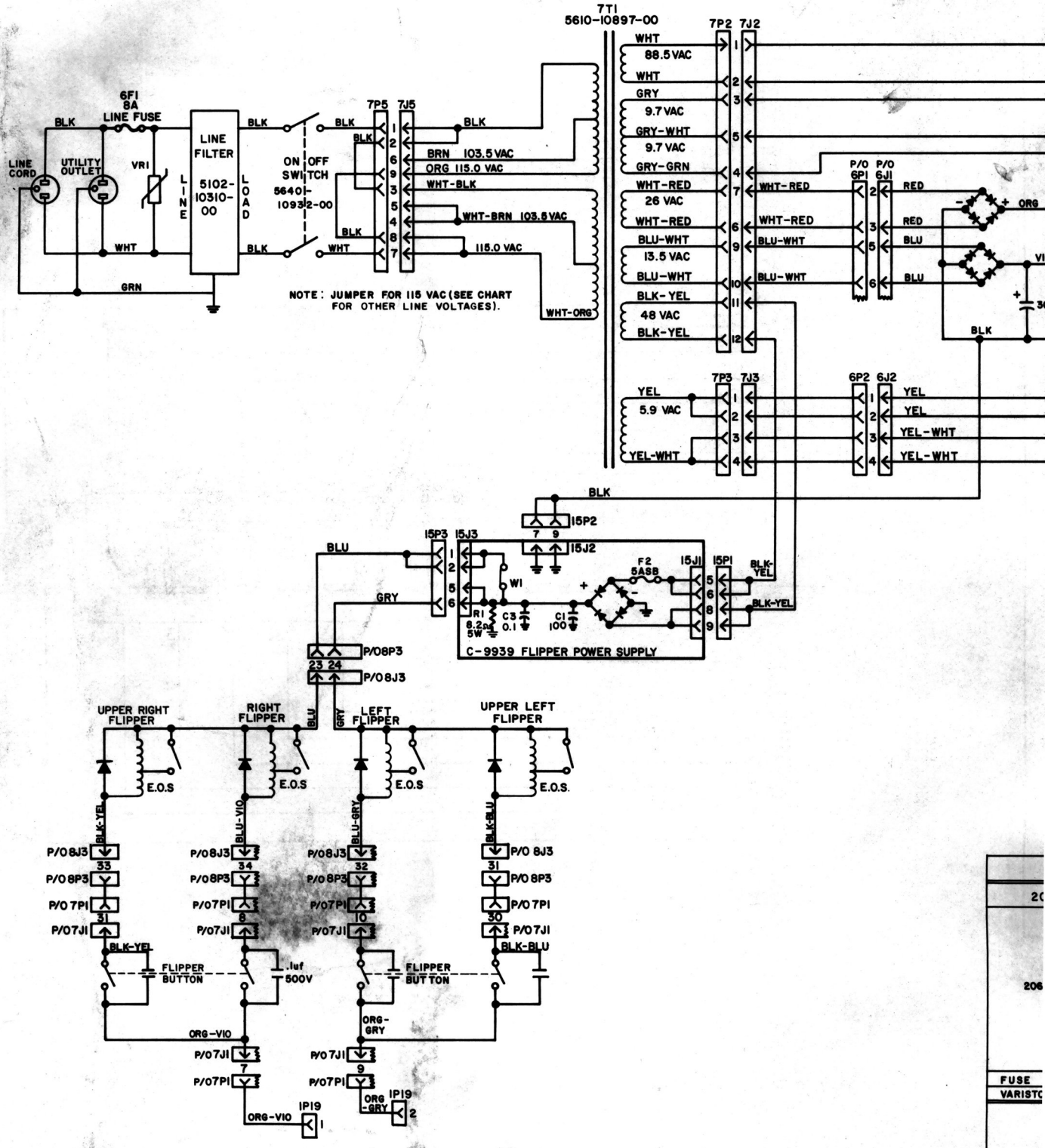
7T1
5610-10897-00
6F1
8A
LINE FUSE
LINE CORD
UTILITY OUTLET
VR1
LINE FILTER
5102-10310-00
LINE
LOAD
ON SWITCH
OFF
5640-10932-00
7P5
7J5
BLK
WHT
GRN
BRN 103.5 VAC
ORG 115.0 VAC
WHT-BLK
WHT-BRN 103.5 VAC
115.0 VAC
WHT-ORG
NOTE: JUMPER FOR 115 VAC (SEE CHART FOR OTHER LINE VOLTAGES).
7P2
7J2
WHT
88.5 VAC
GRY
9.7 VAC
GRY-WHT
9.7 VAC
GRY-GRN
WHT-RED
26 VAC
BLU-WHT
13.5 VAC
BLK-YEL
48 VAC
BLK-YEL
P/O 6P1
P/O 6J1
RED
BLU
ORG
7P3
7J3
YEL
5.9 VAC
YEL-WHT
6P2
6J2
15P2
15P3
15J3
15J2
15J1
15P1
BLU
GRY
W1
R1 8.2Ω 5W
C3 0.1
C1 100
F2 5AS8
BLK-YEL
C-9939 FLIPPER POWER SUPPLY
P/O8P3
P/O8J3
UPPER RIGHT FLIPPER
RIGHT FLIPPER
LEFT FLIPPER
UPPER LEFT FLIPPER
E.O.S
BLK-YEL
BLU-VIO
BLU-GRY
BLK-BLU
P/O8J3
P/O8P3
P/O7P1
P/O7J1
FLIPPER BUTTON
.1uf 500V
ORG-VIO
ORG-GRY
1P19

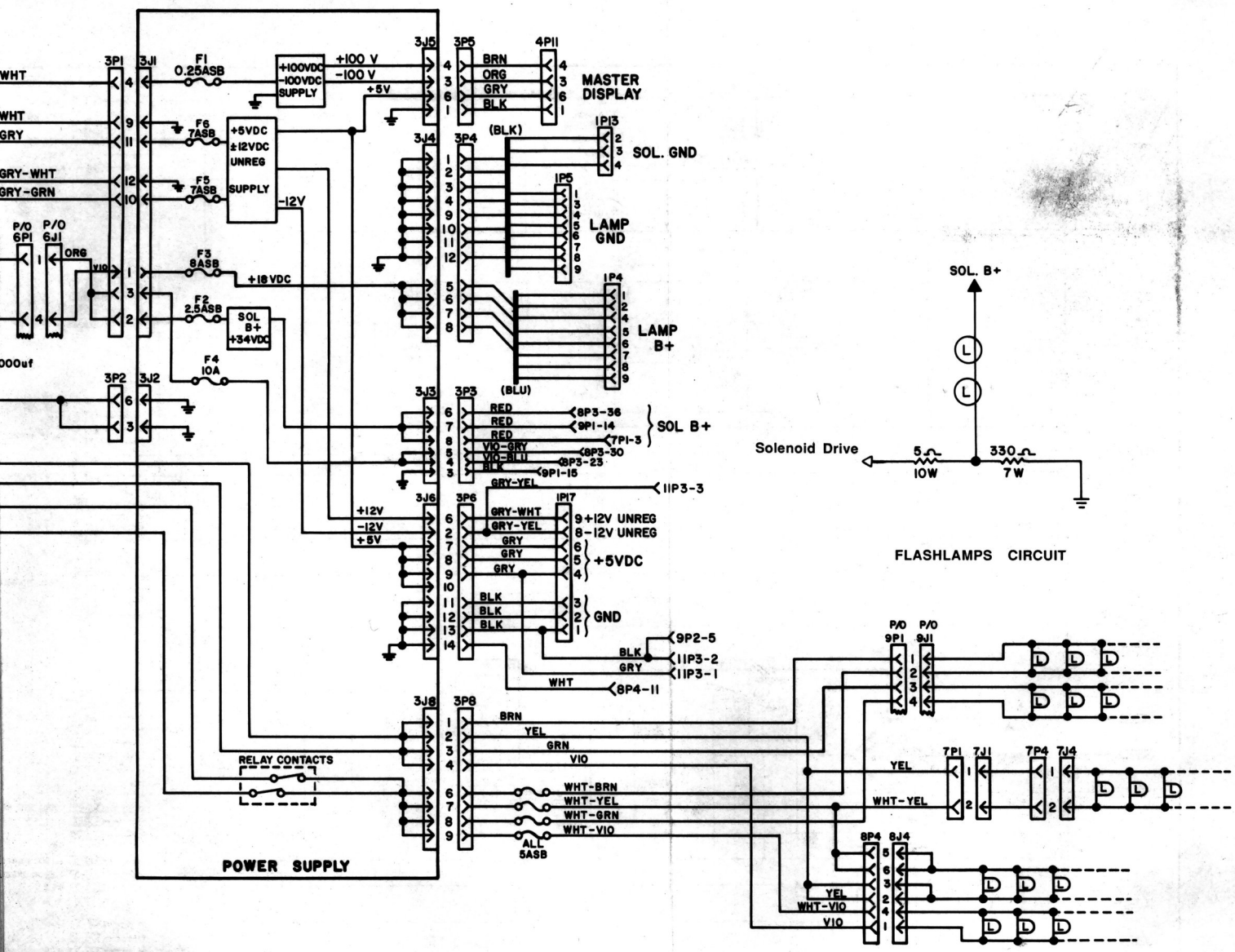

JUMPER CHART (Transformer)		
/ 218 VAC	230 VAC	103.5 VAC
4 ASB	4 ASB	8 ASB
275 V	275 V	130 V

275 V. VARISTOR: 5017-09063-00
130 V. VARISTOR: 5017-09044-00
FOR 220-VAC SB: 5731-06314-00
FOR 115 VAC SB: 5730-09252-00

Power Wiring Diagram

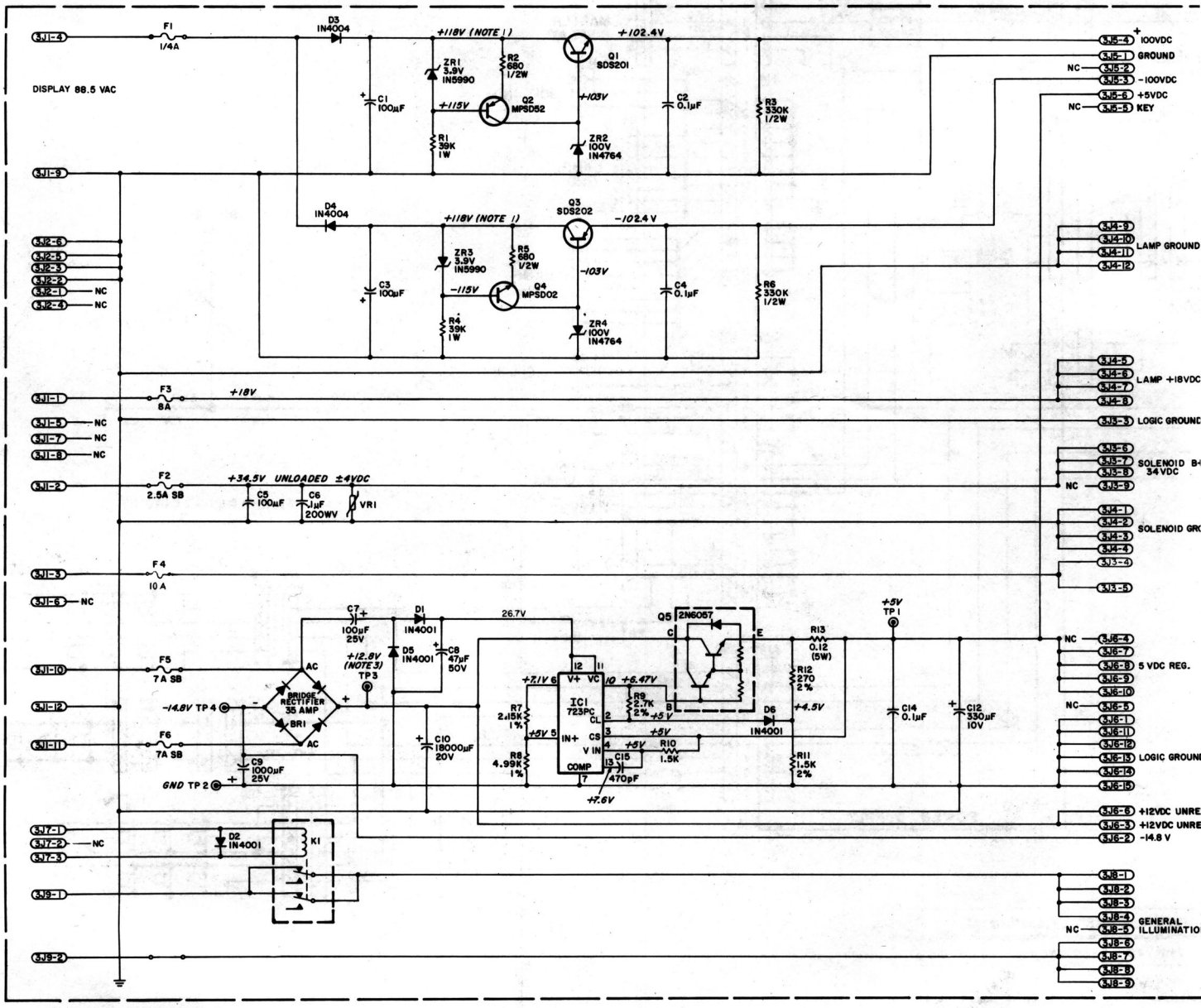

NOTES:

1. Display voltage measured with digits display test ON, and displays at all zeroes.
2. Unless otherwise indicated, all resistors are in ohms (Ω), 1/4 watt.
3. TP3 (unregulated +12 VDC) readout should not go lower than +10.5 V, or intermittent reset will occur.

D-8345 Power Supply Schematic

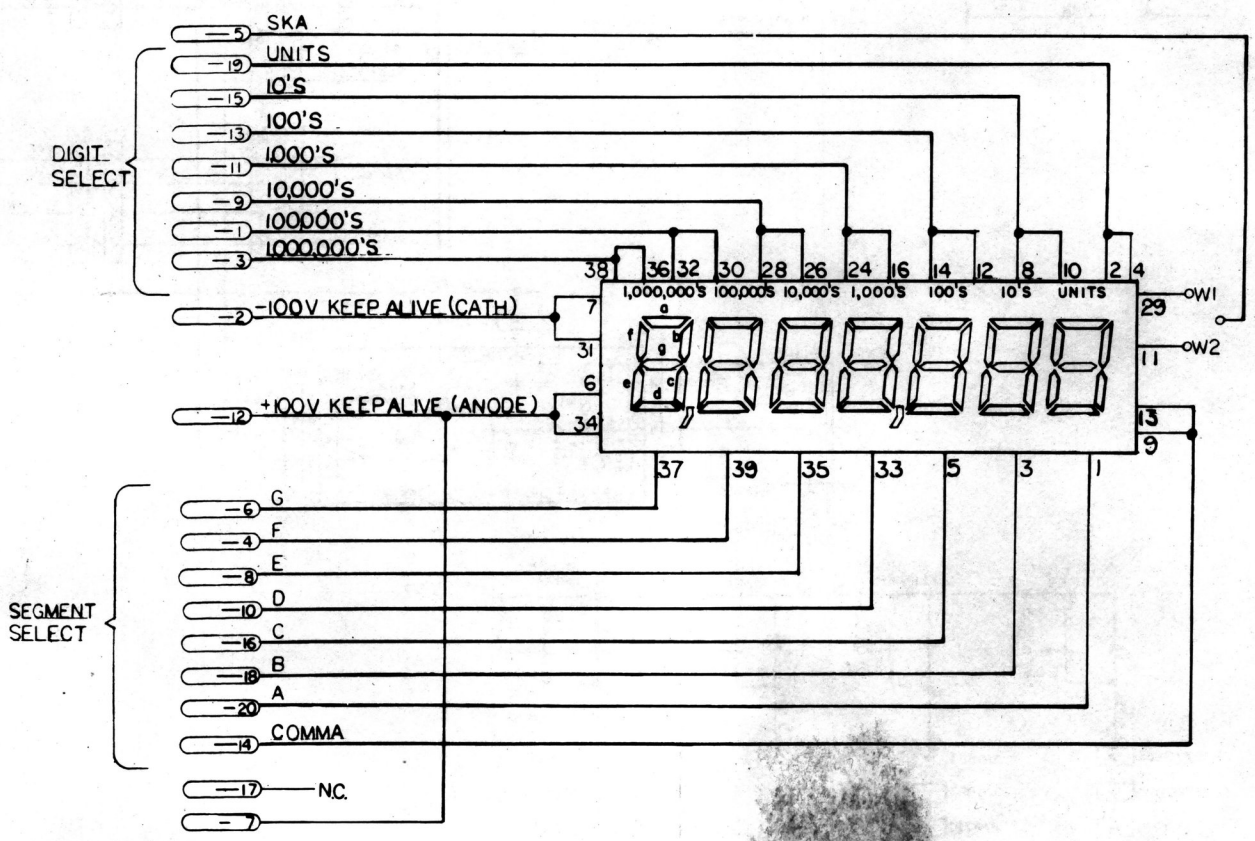

C-8364 Player Score Display Schematic

GRAND LIZARD Lamp-Matrix Table

COLUMN / ROW	1 Q66 YEL-BRN 1J7-1	2 Q64 YEL-RED 1J7-2	3 Q62 YEL-ORN 1J7-3	4 Q60 YEL-BLK 1J7-4	5 Q58 YEL-GRN 1J7-6	6 Q56 YEL-BLU 1J7-7	7 Q54 YEL-VIO 1J7-8	8 Q52 YEL-GRY 1J7-9
Q80 1 RED-BRN 1J6-1	Game Over 1	4X 9	5 17	All Scores 2X 25	Multi-Ball Arrow (middle) 33	Special (Bottom Right Standup) 41	Left Drain 49	4-Bank 20K 57
Q81 2 RED-BLK 1J6-2	Match 2	5X 10	6 18	All Scores 3X 26	Multi-Ball Arrow (upper) 34	Left Magnet (lower) 42	Right Drain 50	4-Bank 40K 58
Q82 3 RED-ORN 1J6-3	Sword 3	10X 11	7 19	Bonus Holdover Collected 27	L 35	Left Magnet (middle) 43	Not Used 51	4-Bank 60K 59
Q83 4 RED-YEL 1J6-5	Sword 4	Shoot Again (Playfield) 12	8 20	Spinner 28	I 36	Left Magnet (upper) 44	Left Ramp Mystery 52	4-Bank 80K 60
Q84 5 RED-GRN 1J6-6	Ball in Play 5	1 13	9 21	Right Ramp B 29	Z 37	Right Magnet (lower) 45	Extra Ball (top) 53	4-Bank 100K 61
Q85 6 RED-BLU 1J6-7	Shoot Again (Backbox) 6	2 14	10 22	Lane to Top Bonus Holdover Arrow 30	A 38	Right Magnet (middle) 46	Turn 10K 54	Top Right 50K 62
Q86 7 RED-VIO 1J6-8	2X 7	3 15	20 23	Left Ramp A 31	R 39	Right Magnet (upper) 47	Turn 20K 55	Top Right Release 63
Q87 8 RED-GRY 1J6-9	3X 8	4 16	Extra Ball (bottom) 24	Multi-Ball Arrow (lower) 32	D 40	Right Ramp Mystery 48	Turn 40K 56	3-Bank Special 64

GRAND LIZARD Switch-Matrix Table

COLUMN / ROW	1 Q45 GRN-BRN 1J8-1	2 Q49 GRN-RED 1J8-2	3 Q44 GRN-ORN 1J8-3	4 Q48 GRN-YEL 1J8-4	5 Q43 GRN-BLK 1J8-5	6 Q47 GRN-BLU 1J8-7	7 Q42 GRN-VIO 1J8-8	8 Q46 GRN-GRY 1J8-9
1 WHT-BRN 1J10-9	Plumb Bob Tilt 1	Playfield Tilt 9	Right Return Lane 17	3-Bank 25	Multi-Ball 2 33	Right Special Arrow 41	Not Used 49	Not Used 57
2 WHT-RED 1J10-8	Ball Roll Tilt 2	Outhole 10	Left Outlane 18	3-Bank 26	Multi-Ball 3 34	Ramp Tongue 42	Not Used 50	Not Used 58
3 WHT-ORN 1J10-7	Credit Button 3	Shooter Lane 11	Right Outlane 19	3-Bank 27	L 35	Left Kicker 43	Not Used 51	Not Used 59
4 WHT-YEL 1J10-6	Right Coin Chute 4	Ball Trough #1 (Lower Right) 12	4-Bank 20	Spinner 28	I 36	Right Kicker 44	Not Used 52	Not Used 60
5 WHT-GRN 1J10-5	Center Coin Chute 5	Ball Trough #2 (Center) 13	4-Bank 21	Right Ramp 29	Z 37	Left Magnet 45	Not Used 53	Not Used 61
6 WHT-BLU 1J10-3	Left Coin Chute 6	Ball Trough #3 (Upper Left) 14	4-Bank 22	Right Chute to Top 30	A 38	Right Magnet 46	Not Used 54	Not Used 62
7 WHT-VIO 1J10-2	Slam Tilt 7	Turnaround 15	4-Bank 23	Left Ramp 31	R 39	Not Used 47	Not Used 55	Not Used 63
8 WHT-GRY 1J10-1	High-Score Reset 8	Left Return Lane 16	Top Right Standup 24	Multi-Ball 1 32	D 40	Right Flipper (E O S) 48	Not Used 56	Not Used 64

WARNINGS & NOTICES

WARNING

FOR SAFETY AND RELIABILITY, *WILLIAMS ELECTRONICS GAMES* does not recommmend or authorize any substitute parts or modifications of *WILLIAMS'* equipment.

USE OF Non-*WILLIAMS'* PARTS and modifications of game circuitry may adversely affect game play, or may cause injuries.

SUBSTITUTE PART OR EQUIPMENT MODIFICATIONS may void FCC Type Acceptance.

BECAUSE THIS GAME IS PROTECTED by Federal copyright, trademark, and patent laws, unauthorized game conversions may be illegal under Federal law.

THIS 'CONVERSION' PRINCIPLE ALSO APPLIES to unauthorized facsimiles of *WILLIAMS'* equipment, logos, designs, publications, assemblies, and games (or game features not deemed to be in the public domain), whether manufactured with *WILLIAMS'* components or not.

WARNING

This equipment generates, uses, and can radiate radio frequency energy, and if not installed and used in accordance with the instructions manual, may cause interference to radio communications. It has been tested and found to comply with the limits for a Class A computing device pursuant to Subpart J of Part 15 of FCC Rules, which are designed to provide reasonable protection against such interference when operated in a commercial environment. Operation of this equipment in a residential area is likely to cause interference in which case the user at his own expense will be required to take whatever measures may be required to correct the interference.

WARNING

FCC STICKER. Check the back of your *GRAND LIZARD* game to verify that an FCC-certification sticker was attached to your game at the factory.

All games that leave *WILLIAMS'* plants have been tested and found to comply with FCC Rules. Because the sticker is proof of this fact, legal repercussions to the owner and distributor of the game may result, if the sticker is missing. If you receive any *WILLIAMS'* game, manufactured after December 1982, that has no FCC sticker, call *WILLIAMS'* for advice or write us a note on your Game Registration Card. Be sure that the card bears your game's serial number.

RF Interference Notice

CABLE HARNESS PLACEMENTS and ground strap routing on this game have been designed to keep RF radiation and conduction within levels accepted by the FCC Rules.

TO MAINTAIN THESE LEVELS, reposition harnesses and reconnect ground straps to their original placements, if they become disconnected during maintenance.

Notice

GRAND LIZARD, MAGNA-SAVE, and MULTI-BALL are trademarks of *WILLIAMS ELECTRONICS GAMES, INC.*

FOR SERVICE...

CALL your authorized *WILLIAMS'* Distributor.

Williams®
ELECTRONICS GAMES, INC.
3401 N. California Ave.
Chicago, IL 60618
312/267-2240
Telex 253095

© - 1986 *WILLIAMS ELECTRONICS GAMES, INC.*